ATERIALS TECH CO., LTD.

Risesun

郑州瑞昇新材科技有限公司

ZHENGZHOU RISESUN MATERIALS TECH CO., LTD.

Hotbar®

1600℃碳化硅电阻加热元件

SiC Heating Elements

1850℃二硅化钼电阻加热元件

$MoSi_2$ Heating Elements

郑州瑞昇新材科技有限公司
ZHENGZHOU RISESUN MATERIALS TECH CO., LTD.

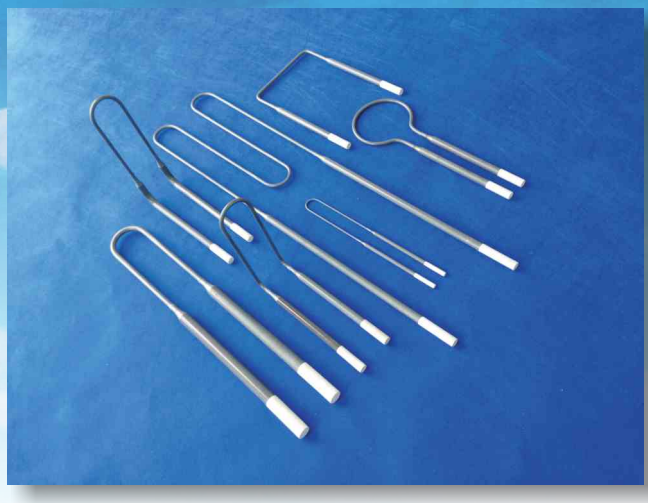

公司简介

郑州瑞昇新材科技有限公司专注于碳化硅加热元件的生产和研究，于2014年由从业近三十年的生产、技术、管理和销售团队成立，凭借他们丰富的经验，自公司成立以来，连年保持着30%以上的增长率，与国内大部分的的知名窑炉厂家配套供货，成为了中国碳化硅加热元件的知名品牌和龙头企业之一。2018年我们完成了13000平方米新工厂的扩建，年产量达到了240吨；2019年成功研发并量产了高密度碳化硅加热元件，密度达到了2.65g/cm^3，经实验室测试和客户试用，在各种工况条件下寿命比普通产品都提高了50%以上。

我们拥有国际领先的工艺和技术，先进的生产和检测设备，丰富的制造经验，完善的质量保证和环保体系，采用国际最新行业标准，为客户提供高品质的产品、专业的技术咨询和服务，产品畅销全国各地，并出口数十个国家和地区，客户包括各领域世界知名厂商。

我们的优势：

— 稳定的品质

— 快速的交付

— 各种窑炉配套加热元件的设计咨询

— 异型碳化硅加热元件的设计、开发和应用咨询

Company introduction

Zhengzhou Risesun Materials Tech Co., Ltd is specialized in producing & researching of SiC heating elements, which was founded by professional team of production, technology, management and sales in 2014, and the team has 30 years of working experience. Since company foundation, the growth rate keeps more than 30% yearly, and our SiC heating elements match to most of famous manufacturers of kiln & furnace in China, Risesun has become a well-known brand of SiC heating elements and one of the leading manufacturers in this field. Expansion of 13000 M^2 new factory was finished in 2018, output achieved 240 tons yearly; we developed & researched the high density SiC heating elements in 2019 and put into volume production successfully, density achieved to 2.65g/cm^3, through lab testing and clients trial producing, service life of it improved more than 50% under various conditions than common ones.

We have world-class process & technology, advanced production & test equipments, rich experience of manufacturing, excellent system of quality control and environment protection. We adopt the latest industrial standard and provide customers with super quality products, professional technology solution & service. Our products are sold all over China and exported to dozens of countries, our customers include the worldwide well-known manufacturers in various industries.

Our advantages:

- Stable quality
- Fast delivery
- Design and consultation of heating elements for various kiln & furnace
- Design, development and application consultation of special SiC heatingelements

“专业、品质、诚信、创新”是我们的核心理念，选择瑞昇就是选择放心！

“Professional, Quality, Integrity, Innovation” is our core idea. To choose Risesun is to choose rest assured!

Risesun Hotbar
碳化硅电热元件
SiC Heating Elements

Hotbar碳化硅电阻加热元件是选用高纯度α碳化硅原料经挤压成型，高温再结晶而成的棒状或管状体。最优化的碳化硅颗粒结构使其在工业和实验室使用显示出独特性能，在各种应用条件下尤其在氧化和腐蚀性气体环境中有着最佳的使用寿命。不用任何支撑，Hotbar元件可在1600℃条件下垂直或水平安装使用而不变形，这就为窑炉设计提供了极大方便，并可在不间断生产的情况下进行元件更换，在连续操作生产领域内，Hotbar元件就更显现出此特征，其高负荷承受力特性适用于小容积高功率的环境。因此它被广泛应用于锂电正负极材料、磁性材料、粉末冶金、陶瓷、玻璃、有色金属和机械等工业的各种高温电炉及其它电加热设备上。

Hotbar SiC heating elements are manufactured to rod or tube form by recrystallization process under high temperature after extrusion forming with high purity alpha silicon carbide raw materials. Optimized structure of silicon carbide particles makes SiC heating elements having special character for applications in industry and lab. Hotbar SiC heating elements have the best service life under various working conditions, especially for oxidation and/ or corrosive atmosphere. Hotbar SiC elements may be mounted either vertically or horizontally at the max. operation temperature 1600℃ without any special supports, the elements will not deform,this provide a flexible furnace design, and also elements can be replaced while furnace is working continuously. Its high loading capacity is suitable for low–volume and high power conditions. Therefore, it is widely used in various high temperature electric furnaces and other electric heating devices, such as industrial applications involving anode and cathode materials for lithium batteries, magnet, ceramics, powder metallurgy, glass, metallurgy and machinery.

Hotbar元件采用国际先进的生产工艺和技术，发热部与冷端用一种特殊的碳化硅粘接剂熔接而成，在高温下对焊接处进行第二次硅化处理，从而进行了固化并大大提高了焊接强度，给客户提供了无忧患的高品质产品。同时由于发热部的阻值远高于冷端，具有优良的热冷端电阻比，高效节能的特性。

We utilize modern production processes and technology. Hot zone and cold ends are connected by special SiC binding materials, and then we treat the welded section with a second siliconization process at high temperature, which improves the strength of the weld greatly and can provide customers with high quality heating elements. Meanwhile, the resistivity of hot zone is much higher than cold ends, as a result, Hotbar elements have excellent hot and cold resistance rate and feature of energy–efficiency and energy savings. Brand of our SiC heating elements is Risesun Hotbar® .

在干燥洁净的空气条件下，Hotbar元件的棒体温度可达1600℃，但在其他气体环境下有所限制。

In clear and dry air, temperature of Hotbar elements can achieve 1600℃, but it will be limited by gasses such as nitrogen, ammonia, hydrogen and so on.

我们最新的高密度HD型硅碳棒加热元件可提供比常规元件长的多的服务寿命，尤其在腐蚀性气氛的炉内更为显著，例如玻璃等行业。

Our high density SiC heating elements – HD type have much longer service life than common ones, especially in furnaces with corrosive atmosphere, such as industry of glass.

Hotbar元件型号
Type of Risesun Hotbar heating elements

Hotbar元件有RH型（等直径高阻值），RL型（等直径低阻值），U型，CU型，M型（门型），W型（三相），SG型（单螺纹），SGR型（双螺纹），UX型（槽型），DB型（粗端型）,HD型（高密度）等。棒体直径范围从8MM至54MM，最大长度4300MM，SG型和SGR型最大直径为75MM，最大长度1000MM。

Types of Hotbar elements are RH type (equal diameter with higher resistances), RL type (equal diameter with lower resistances), U type, CU type, M type (door shape), W type (three phase), SG (single spiral), SGR (double spiral), UX type (slot shape), DB type (dumbbell shape), HD type (high density) etc. The rods diameter range is 8mm to 54mm, the longest 4300mm, but for SG and SGR type, the max diameter and length is 75mm and 1000mm.

RH & RL type 直棒型

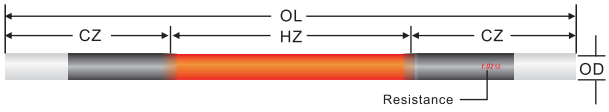

- 型号Type (Risesun Hotbar RH/RL)
- 直径Diameter, mm (OD)
- 发热区长度 Hot zone length, mm (HZ)
- 冷端长度Cold end length, mm (CZ)
- 全长Overall length, mm (OL)

M type 门型

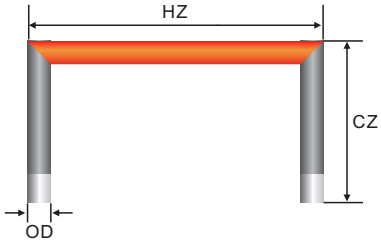

- 型号Type (Risesun Hotbar M)
- 直径Diameter, mm (OD)
- 发热区长度 Hot zone length, mm (HZ)
- 冷端长度Cold end length, mm (CZ)

U & CU type 型

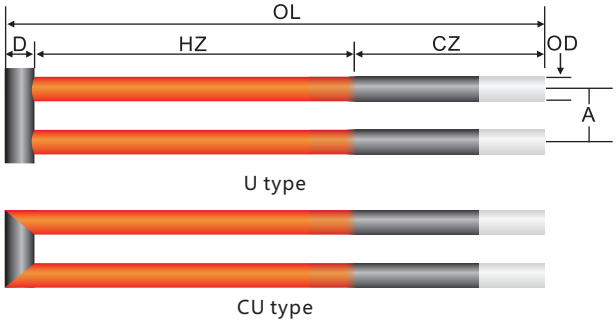

- 型号Type (Risesun Hotbar U/CU)
- 直径Diameter, mm (OD)
- 发热区长度 Hot zone length, mm (HZ)
- 冷端长度Cold end length, mm (CZ)
- 间距Leg center distance, mm (A)
- 连接桥Connection bridge, mm (D)

W type 三相型

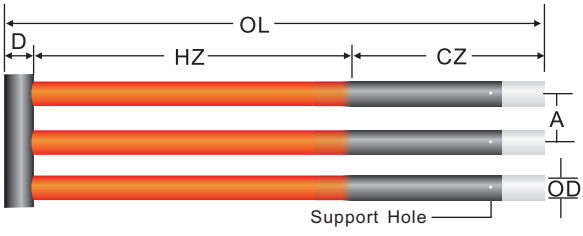

- 型号Type (Risesun Hotbar W)
- 直径Diameter, mm (OD)
- 发热区长度 Hot zone length, mm (HZ)
- 冷端长度Cold end length, mm (CZ)
- 间距Leg center distance, mm (A)
- 连接桥Connection bridge, mm (D)

SG type 单螺纹型

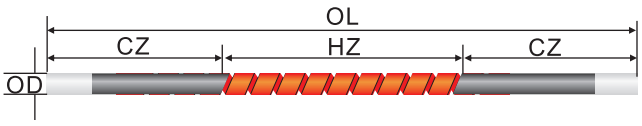

- 型号Type (Risesun Hotbar SG)
- 直径Diameter, mm (OD)
- 发热区长度 Hot zone length, mm (HZ)
- 冷端长度Cold end length, mm (CZ)
- 全长Overall length, mm (OL)

SGR & UX type 双螺纹 & 槽型

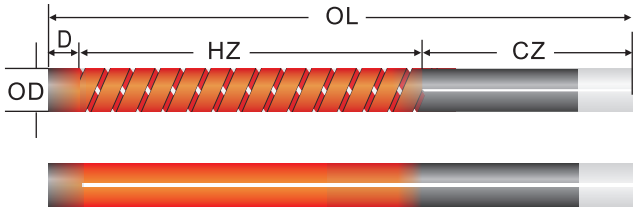

- 型号Type (Risesun Hotbar SGR/UX)
- 直径Diameter, mm (OD)
- 发热区长度 Hot zone length, mm (HZ)
- 冷端长度Cold end length, mm (CZ)
- 全长Overall length, mm (OL)

DB type 粗端型

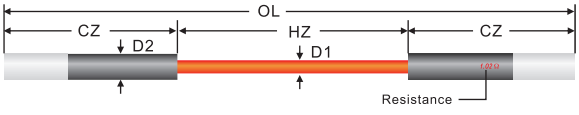

- 型号Type (Risesun Hotbar DB)
- 发热部直径Hot zone diameter, mm (D1)
- 冷端直径Cold end diameter, mm (D2)
- 发热区长度 Hot zone length, mm (HZ)
- 冷端长度Cold end length, mm (CZ)

Hotbar物理性质 Physical properties

项目 Item	单位 Unit	型号Type	
		RH & RL	HD
体积密度 Bulk density	g/cm³	2.5	2.65
气孔率 Porosity	%	23	18
抗折强度 Rupture strength	MPa (25℃)	50	60
热传导率 Thermal conductivity	W/m·℃ (1000℃)	14-19	14-19
比热 Specific heat	kj/kg·℃ (25~1300℃)	1.0	1.0
热膨胀系数 Coefficient of thermal expansion	(1000℃) × 10^{-6}	4.5	4.5

Hotbar化学性质 Chemical properties

元件在空气中使用到800℃时开始氧化，温度达到1000-1300℃时，发热部表面生成一层二氧化硅保护膜，1300℃时结晶出方石英，在1500℃时，保护膜达到一定的厚度，从而使元件的氧化速度变得极为缓慢，趋于稳定。如果继续升温至1627℃以上时，则保护膜受到破坏，氧化速度显著增加，造成元件过早损坏。

The elements begin to oxidize when heated up to 800℃ in air, a SiO_2 protective film forms on the surface of the hot zone when the temperature reaches 1000~1300℃; Cristobalite will be crystallized at 1300℃; The protective film gets to a certain thickness at 1500℃ which makes the elements oxidation speed very slowly. If heating exceeded 1627℃, the protective film will be destroyed and oxidation will become more rapidly and elements will fail prematurely.

元件在使用过程中虽然氧化极为缓慢，但长时间运行仍然会导致电阻值增大，这种现象叫做“老化”。为了减缓“老化”速度，在特殊的气氛条件下，我们可提供不同类型保护涂层的元件来提高其使用寿命。

Even though oxidization of elements is slow, resistance value still will increase after long time working, it is "aging". To retard the aging speed, for certain atmospheric conditions, we can provide different protection coatings which will improve the service life of the elements.

Hotbar元件在不同气氛下使用的影响和解决办法
Effect from different atmosphere to elements and solution

气氛 Atmosphere	对元件的影响 Effect	解决办法 Solution	推荐涂层 Recommend Coating
水蒸汽和湿气 Vapor and Moisture	比在干燥大气中使用寿命缩短约20% Service life shortened 20% than in dry air	新炉子运行或旧炉子长时间不工作再使用时，要先低温充分干燥后再升温 New furnaces or furnaces stopped working long time, it's necessary to dry at low temperature completely and then heat up	A涂层 A coating
氮气 Nitrogen gas	温度超过1400度时氮气与碳化硅反应生成氮化硅，使元件变脆，寿命缩短，受露点影响与氢气的状况相同 Above 1400℃, nitrogen will react with SiC to form silicon nitride, elements will become fragile and service life shortened. The effect by dew point is same as H_2	建议炉温在1300度以下使用，表面负荷尽量小 The recommended furnace temperature not higher than 1300℃, surface loading as low as possible	B涂层 B coating
氢气 Hydrogen	元件上升到1350度以后电阻急速增加，机械强度也下降，而且根据气体干湿的不同寿命也差别很大 The mechanical strength decreasing when elements temperature exceeds 1350℃, and also service life much depends on intensity of moisture.	建议炉温在1300度以下使用，表面负荷小于5W/CM^2 Operation temperature lower than 1300℃, surface loading less than 5W/ CM^2	C涂层 C coating
氨气 Ammonia	与氢气、氮气的状况相同 Same as hydrogen and nitrogen	建议炉温在1300度以下使用，表面负荷小于5W/CM^2 Operation temperature lower than 1300℃, surface loading less than 5W/ CM^2	B涂层 C涂层 B coating C coating
分解气体 Disassociated gas (Mixture of N_2, CO，CO_2，H_2, CH_4)	加热过程中元件表面附着分解后的碳黑，造成棒体疏松 Carbon black from decomposed hydrocarbon on elements surface will cause elements rod loose.	经常向炉内输送空气，让多余的碳燃烧。在炉子构造方面，保持加热元件间有足够的间隔以防止短路. Introducing air into furnace frequently to burn up additional Carbon. At side of furnace design, keep enough space between elements to prevent short circuit.	
硫 （S、S_2）	元件温度升到1300度后，元件表面被侵蚀，电阻急剧增加 Above 1300℃, surface of elements will be corroded and resistance increasing rapidly.	将元件温度控制在1300度以下 Keep elements temperature lower than 1300℃	
真空 Vacuum	在高真空中不能生成二氧化硅保护膜，碳化硅自行分解，寿命缩短 SiO2 protect film will not be formed, SiC decomposed itself and service life shortened.	在0.13Pa以上的压力和1100度以下的炉温使用 Using in pressure over 0.13Pa and furnace temperature under 1100℃	
其他 Others	由被处理物产生的各种物质，如铅、锑、碱金属的化合物与元件反应，使其寿命缩短 Various substances from treated materials, such as Pb, Sb, alkali metal react with elements, which may shorten elements service life.	预先将这些物质从处理物中除掉，炉内设排气口以便减弱其影响 To get rid of these substances in advance, design gas outlet in furnace in order to decrease the effect.	D涂层 D coating

Hotbar元件的电气特性
Electrical properties of elements

Hotbar元件以其半导体的特性具有远高于金属导体的阻值，在空气中加热，元件发热部表面温度达到1000℃左右时，电阻率为600~1400Ω·mm²/m。元件的电阻值随着温度的升高而变化，从室温到650℃为负值、650℃以上为正值特性曲线。其在约650℃时电阻值达到最低点，超过此温度阻值与温度成正比增加。在低于650℃时，微小的杂质也会导致较大的电阻变化，所以在室温条件下测出的阻值不能代表在高温下的阻值。一般要求在恒定温度1000℃或以上进行阻值测量，用测得的电压和电流比计算电阻值。

Hotbar is a semiconductor material, which has a much higher resistance value than metal conductors, heating in air, when the surface temperature of the hot zone reaches about 1000℃, the resistivity is 600~1400Ω · mm²/m. The characteristic curve is negative from room temperature to 650℃, it is a positive value above 650℃. The resistance value is lowest at about 650℃, exceed this temperature, the value will increase proportionally to temperature. Below 650℃, minor impurities will cause resistance value to change substantially, so the resistance value at room temperature can not reflect the value at high temperature. The resistance value always tests at a steady temperature 1000℃ or above, which is calculated base on voltage and current tested.

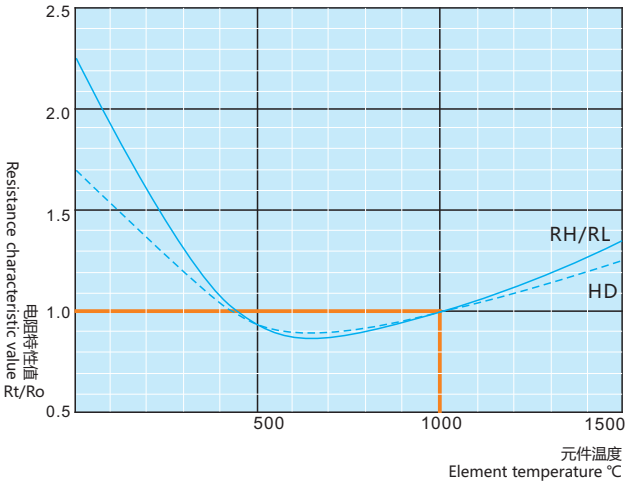

Ro: 元件在1000℃时的电阻值 Resistance at 1000℃
Rt: 元件在不同温度时的电阻值 Resistance at each temperature

所有的碳化硅加热元件随着使用时间的延长阻值相应会升高老化，当元件电阻增大到其最初阻值的3倍时视为其寿命的终结。影响元件老化和服务寿命有如下几个因素：

The resistance of all SiC heating elements will increase as it ages. The service life is functionally over when the resistance increase 3 times compared to the original. The factors which affect the service life are the following:

- 工作温度
  Working temperature
- 元件表面负荷（W/CM²）
  Elements surface loading
- 炉内气氛
  Furnace atmosphere
- 工作方式（连续或间断）
  Working method (continuous or intermittent)
- 所烧材料及其产生的有害物质
  Materials sintered and the harmful substance generated from that
- 电路的连接方式
  Connection
- 控温方式
  Temperature control method
- 使用习惯
  Operation habit

在1400℃洁净氧化气氛中使用，Hotbar元件一般可获得较长的使用寿命，为达到最佳寿命，在炉子设计时应该考虑尽可能低的表面负荷，建议3~8W/CM²。

The Hotbar elements always get longer service life at 1400℃ in clean oxidizing atmosphere, in order to get the best service life, the recommended surface loading is 3~8W/ Cm² when design the furnaces.

根据炉子的结构、气氛和温度正确地选择元件的表面负荷是达到最佳使用寿命的关键。右图示出了元件辐射在不受阻碍情况下的炉温、元件温度与表面负荷之间的关系。

The key factor for optimum service life of the element is to choose the surface loading of the element related to the furnace structure, atmosphere and temperature. The right figure shows the relationship between furnace temperature, element temperature and element surface loading considering the element radiation as not obstructed.

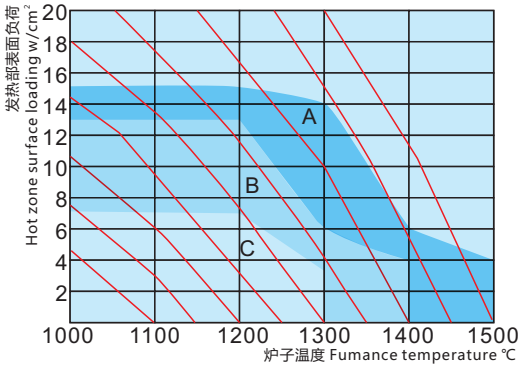

A 正常温度的空气气氛 air stand ard humldity
B 气氛中总氢气含量小于20% total H_2content<20%
C 气氛中总氢气含量大于20% total H_2content>20%
— 元件温度 element temperature

每一支Hotbar元件在出厂前都通电加热至1000℃进行测试，用最精确的数字仪表测量其电压和电流，并将电阻值标记在元件末端。在串联使用时阻值匹配的精确度比在并联使用时更重要。一组元件短时间使用后的个别元件断裂或老化，用一支阻值较高的新元件替换即可，但如果已使用有一段时间的话，就该整组替换。在换上新的元件后，相应的电源电压应该调低以和新元件的电阻相匹配。

The voltage and current of every Hotbar element will be tested with digital instruments at 1000℃ before delivery, and the resistance value will be marked at terminal of element. It is more important to match resistance accurately in series than in parallel. If individual elements in a set break or have aged after short time application, just replace it with a new element with higher resistance value; if element has served some time, the whole set of elements should be replaced. After the new elements are replaced, the voltage of power should be adjusted down to match with the new elements resistance.

Hotbar元件安装运行须知
Installation and operation of elements

Hotbar元件可以看作是简单电阻负载和正常的基本电路定律应用：如，V是电压，I是安培，W是瓦特，R是电阻（Ω）

Hotbar can be looked as simple resistive load and basic circuit law is available for it: Such as V is voltage, I is ampere, W is watt, R is Resistance （Ω）

$V = IR = \sqrt{WR} = W/I$ $W = VI = I^2R = V^2/R$ $I = V/R = \sqrt{W/R} = W/V$ $R = V/I = V^2/W = W/I^2$

在推荐的方式下，对元件进行安装、连接和控制是很重要的，能保证元件寿命最大化。

To install, connect and control the elements base on recommended method is very important, it will ensure the best service life.

元件安装
Element installation

元件与元件中心之间的最小距离应为元件直径的2倍，但2.5~3倍为最佳，元件中心与炉壁之间的最小距离应为元件直径的1.5倍，元件中心与被加热物之间的距离至少应为元件直径的2倍。

The min. spacing between centers of two elements should be 2 times of element diameter, the best is 2.5~3 times; the min. distance between center of element and furnace wall should be 1.5 times of element diameter; the distance between element center to products to be heated should be 2 times of element diameter at the least.

元件连接
Element connection

Hotbar元件可以并联，串联或两者混合连接。并联是理想的方式，每个元件的电阻会随着使用趋于一致。然而在串联方式下，不同元件的电阻差别会越来越大从而导致元件寿命缩减。

Parallel, series or combined connections can be made with Hotbar, however, parallel connections are preferred since any small variations in resistance value will tend to balance with use, but with series connection, the small variations will cause element service life to decrease.

元件的电阻增加相当慢，如果元件电阻值匹配的好的话，最多可以串联4支。炉温超过1400度，建议串联的元件限制在2支。

The element's resistance increases slowly over time, if the resistance value matched well, they may be connected 4 in series at the most. At furnace temperature above 1400℃, the recommended number of elements in series to be limited to two.

两者混联通常作为一个有效的折中方案，这种情况下，串联的几组应并联。元件任何情况下都不能将并联的几组串联，因为一个元件坏掉将导致这一组上剩余的其他元件超载。

Series/ parallel combination is a workable compromise plan, under this condition, the groups of series should be connected in parallel; the groups of parallel can’t be connected in series in any case, otherwise, if one element failed, the other elements in this group will be overloaded.

三相连接包括星形连接和角形连接。当用星形连接时，建议4线供电，以保证相电压平衡，而与相电阻无关。如果必须使用3线星形连接，那么相电阻必须紧密匹配。

3 phase connections include star connection and angle connection. With star connection, 4 lines power supply is recommended in order to keep phase voltage in balance, having nothing to do with phase resistance; if star connection with 3 lines is utilized, phase resistance must be matched very closely.

电阻值的匹配
To match resistance value

串联下建议元件电阻范围彼此控制在+/-5%内，并联时元件电阻可以控制+/-10%范围内。如果任何元件在很短时间内就不能工作或断掉，可以用新元件替换，但最好挑选电阻较高的元件。如果元件已经使用了相当长时间，整组元件都要换掉，否则新的或旧的元件就要承载过高的负荷，导致其过早的损坏。

In series connection, the recommended resistance range is within +/–5%; in parallel connection, it may be +/–10%. In the case of an element that has failed or broken in a short time frame, replace it with a new element. It's better to choose an element with higher resistance. If an element is used for a prolonged time, all the elements in a group have to be replaced; otherwise, the new or old element will be subjected to too high a load and will fail prematurely.

把一个炉子上的元件分成一定数量的小控制组是一个不错的操作，以简化将来对电阻进行匹配。比如，一个炉子装48支元件，分成6支8组就比分成16支3组要有弹性的多，匹配电阻就要简单的多。

A simple way to match the resistances is to divide all the elements for a furnace in to several small control groups. For example, if there are 48 elements in a furnace, divide them into 8 groups of 6 elements per group, this is easier than dividing them into 3 groups of 16 elements in a group.

当替换一组元件后，必须在启动前保证电源供给设备的电压输出减小到正确的值，因为元件过载，即便是很短的时间，也会造成不可挽回的损失。老的元件可以保留下来，随后搭配其他使用一样时间的元件使用。如果可能，替换下来的每一支元件的电压和电流读值都记录下来，增加后的电阻值标在元件的端部，以便以后匹配电阻。

After any group of elements is replaced, it is necessary to decrease the voltage output to the correct minimum value from the power supply, otherwise, the elements will be overloaded quickly and cause complete losses. The old elements from a group may be retained to use some other time. If possible, record voltage and current of every element replaced, and mark the increased resistance value at terminal of element cold end in order to match the resistances in the future.

预留电压
Voltage reserve

元件的电阻会随使用而增大，如要保持元件功率不变电压将会增高，所以要提供可调节的电源供给，也就是要有电压预留。总的电压预留要根据元件的电阻增长率和预期寿命来设计，通常是在新元件需要的电压基础上预留50%~100%。

In order to compensate the change in voltage needed due to element resistance aging, a variable voltage power supply is necessary. Usually 50% ~ 100% voltage reservations adjustment on a new element is required.

比如，新的元件共需要110V的电压，那么110~220V的电压范围就预留了100%，而110~165V就是预留了50%。

For example, new elements need 110V totally, then 110 – 220V voltage range reserves 100%, and 110 – 165V reserves 50%.

当元件长时间工作在1400℃或超过1400℃，或者炉子自身的情况容易导致元件电阻增长过快，应预留100%电压。相反，如果元件温度非常低，或者炉子只是偶尔的使用，预留50%或更少一些也是可以的。

Either elements work at 1400℃ or even above 1400℃, or conditions in the furnace itself are causing resistances of elements to increase rapidly at low temperature, then, 100% voltage reservation is needed. On the contrary, if elements temperature is very low or furnace only works occasionally, 50% voltage reservation is workable.

电源供应
Power supply devices

Hotbar元件一般需要使用可调节的电源供应，以保证设计的功率能够保持贯穿元件的整个寿命过程。所用的设备类型可能影响元件的性能，是否能获得元件最好的寿命，有赖于选择正确的电源供应。

Generally, a variable power supply for Hotbar elements is needed to enable the correct power to be maintained throughout element life. Any type of that supply may affect the performance of element; the key factor in getting the best life is to choose the appropriate power supply.

Hotbar元件可以使用以下几种不同类型的电源供应：
The following power supply devices can be used to Hotbar:

1、可调的输出变压器
Variable output transformer

2、可控硅
Thyristor unit

3、可控硅/变压器混合系统
Combined thyristor/transformer system

4、直接与电源连接
Direct-on-line connection

关于各种电源供应方式的选择和应用，请联系我们，我们将提供更详尽的技术咨询和服务。

For any power supplies, don’t hesitate to contact us, we will provide you with detailed technical consultation and service.

Hotbar元件附件
Accessories of elements

HC & CC型夹HC & CC CLIPS

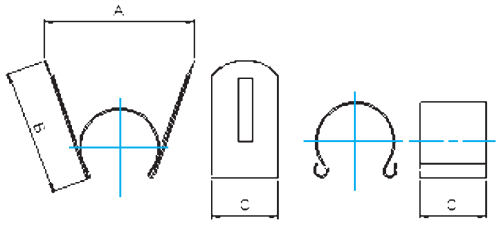

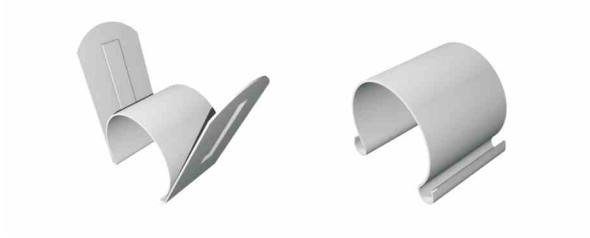

G & D型夹CLAMPS

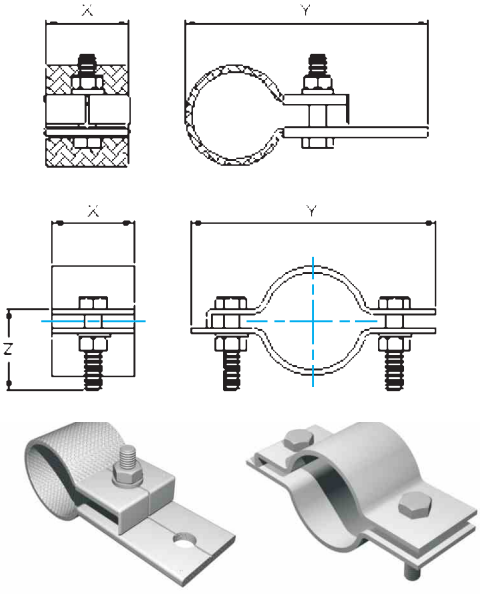

S型连接带TYPE S-BRAIDS

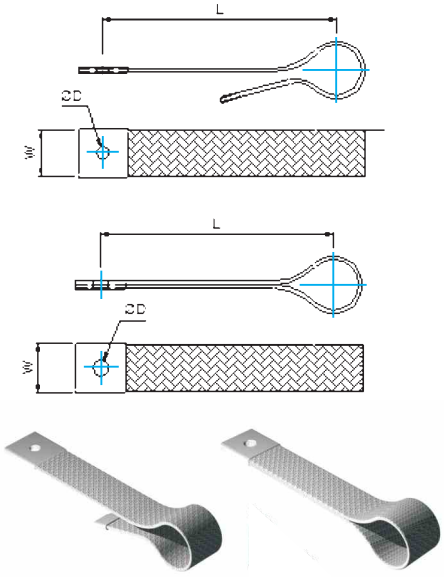

D型连接带TYPE D-BRAIDS

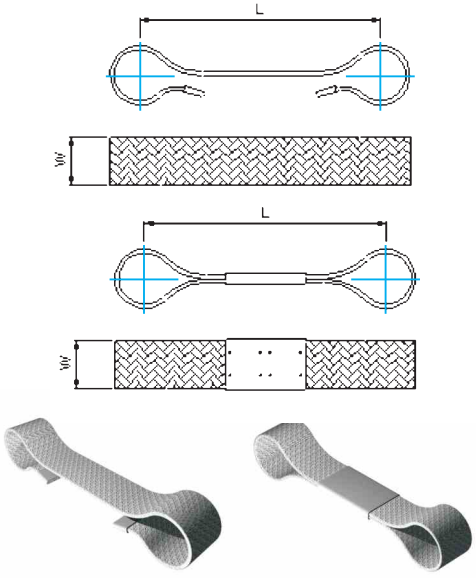

Q型连接带TYPE Q-BRAIDS

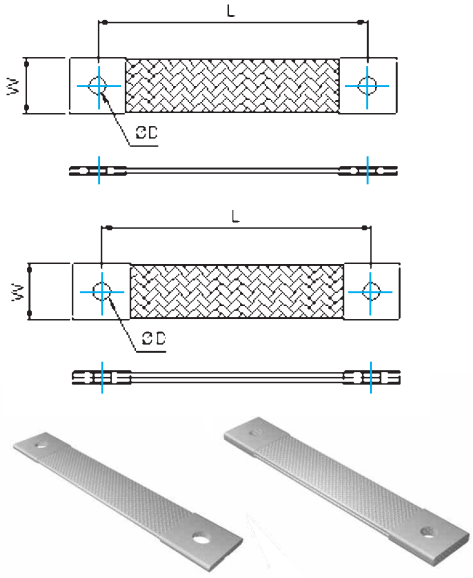

Hotbar元件规格表
Standard size and electrical specifications

所有型号元件规格表中的额定负荷值和测试电压，都是在元件温度1000℃时在敞开的空气状态下的测试值，这个测试值只能在校准测试时使用。新元件最大推荐的操作电压不能超过测试值的80%，功率不能超过测试值的65%。

All the rated loading and testing voltage shown in the list are at element temperature 1000℃ in open air, these value only can be used for adjusting test. The max recommended operation voltage of new elements can't exceed 80% of test value, power not exceed 65% of test value.

Type RH 等直径高阻值
Rod shape with higher resistance

编号 Part No.	直径 Dia (mm)	发热部长 hot zone length (mm)	冷端长 cold end length (mm)	全长 overall length (mm)	发热部表面积 hot zone surface area(cm^2)	额定负荷（1000℃时测试） nominal loading (at 1000℃)		
						电压(V) Voltage	功率(W) Power	电阻(Ω) Resistance
RH81010	8	100	100	300	25	35	430	2.8
RH81510		150	100	350	38	50	650	3.8
RH82010		200	100	400	50	65	850	5.0
RH82510		250	100	450	63	80	1070	6.0
RH101015	10	100	150	400	31	30	530	1.7
RH101515		150	150	450	47	45	800	2.5
RH102015		200	150	500	63	60	1080	3.4
RH102515		250	150	550	79	75	1340	4.2
RH121510	12	150	100	350	56	40	900	1.8
RH121515		150	150	450	56	40	900	1.8
RH122010		200	100	400	75	55	1200	2.5
RH122015		200	150	500	75	55	1200	2.5
RH122020		200	200	600	75	55	1200	2.5
RH122510		250	100	450	94	70	1500	3.3
RH122515		250	150	550	94	70	1500	3.3
RH122520		250	200	650	94	70	1500	3.3
RH123010		300	100	500	113	80	1800	3.6
RH123015		300	150	600	113	80	1800	3.6
RH123020		300	200	700	113	80	1800	3.6
RH142020	14	200	200	600	88	50	1400	1.8
RH142520		250	200	650	110	60	1750	2.1
RH142525		250	250	750	110	60	1750	2.1
RH143020		300	200	700	132	70	2100	2.3
RH143025		300	250	800	132	70	2100	2.3
RH143520		350	200	750	154	85	2450	3.0
RH143525		400	250	900	176	100	2800	3.6
RH163020	16	300	200	700	150	70	2400	2.0
RH163025		300	250	800	150	70	2400	2.0
RH164025		400	250	900	200	95	3260	2.8
RH164525		450	250	950	225	110	3600	3.3
RH165025		500	250	1000	250	120	4000	3.6
RH166025		600	250	1100	300	140	4800	4.1
RH203025	20	300	250	800	188	65	3000	1.4
RH203030		300	300	900	188	65	3000	1.4
RH204025		400	250	900	251	85	4000	1.8
RH204030		400	300	1000	251	85	4000	1.8
RH205030		500	300	1100	314	110	5000	2.4
RH205040		500	400	1300	314	110	5000	2.4
RH206030		600	300	1200	376	130	6000	2.8
RH206040		600	400	1400	376	130	6000	2.8
RH207030		700	300	1300	439	150	7000	3.2
RH207040		700	400	1500	439	150	7000	3.2
RH208030		800	300	1400	502	170	8000	3.6
RH208040		800	400	1600	502	170	8000	3.6
RH209030		900	300	1500	565	190	9000	4.0
RH2010030		1000	300	1600	627	210	10000	4.4

电阻公差Resistance tolerance: ±15%

编号 Part No.	直径 Dia (mm)	发热部长 hot zone length (mm)	冷端长 cold end length (mm)	全长 overall length (mm)	发热部表面积 hot zone surface area(cm²)	额定负荷（1000℃时测试） nominal loading (at 1000℃)		
						电压(V) Voltage	功率(W) Power	电阻(Ω) Resistance
RH253030	25	300	300	900	236	55	3600	0.9
RH254030		400	300	1000	314	75	4700	1.2
RH254040		400	400	1200	314	75	4700	1.2
RH255030		500	300	1100	392	90	5800	1.4
RH255040		500	400	1300	392	90	5800	1.4
RH256030		600	300	1200	470	110	7000	1.7
RH256040		600	400	1400	470	110	7000	1.7
RH257030		700	300	1300	550	130	8200	2.1
RH257040		700	400	1500	550	130	8200	2.1
RH258030		800	300	1400	627	150	9400	2.4
RH258040		800	400	1600	627	150	9400	2.4
RH259030		900	300	1500	705	170	10600	2.7
RH2510030		1000	300	1600	785	190	11800	3.1
RH2511030		1100	300	1700	862	200	13000	3.1
RH2512030		1200	300	1800	940	220	14000	3.5
RH2513030		1300	300	1900	1020	230	15300	3.5
RH2514030		1400	300	2000	1095	250	16500	3.8
RH303030	30	300	300	900	280	50	4300	0.6
RH304030		400	300	1000	380	65	5600	0.8
RH304040		400	400	1200	380	65	5600	0.8
RH305030		500	300	1100	470	80	6900	0.9
RH305040		500	400	1300	470	80	6900	0.9
RH306030		600	300	1200	570	100	8700	1.1
RH306040		600	400	1400	570	100	8700	1.1
RH307030		700	300	1300	660	115	10000	1.3
RH307040		700	400	1500	660	115	10000	1.3
RH308030		800	300	1400	750	130	11300	1.5
RH308040		800	400	1600	750	130	11300	1.5
RH309030		900	300	1500	850	150	13000	1.7
RH309040		900	400	1700	850	150	13000	1.7
RH3010030		1000	300	1600	940	160	14100	1.8
RH3010040		1000	400	1800	940	160	14100	1.8
RH3011030		1100	300	1700	1035	180	15600	2.1
RH3011040		1100	400	1900	1035	180	15600	2.1
RH3012030		1200	300	1800	1130	200	17000	2.4
RH3012040		1200	400	2000	1130	200	17000	2.4
RH3013030		1300	300	1900	1220	210	18300	2.4
RH3013040		1300	400	2100	1220	210	18300	2.4
RH3014030		1400	300	2000	1320	230	19800	2.7
RH3014040		1400	400	2200	1320	230	19800	2.7
RH3015030		1500	300	2100	1410	240	21000	2.7
RH3015040		1500	400	2300	1410	240	21000	2.7
RH3016030		1600	300	2200	1500	260	22500	3.0
RH3017030		1700	300	2300	1600	280	24000	3.3

电阻公差Resistance tolerance: ±15%

Type RL等直径低阻值
Rod shape with lower resistance

编号 Part No.	直径 Dia (mm)	发热部长 hot zone length (mm)	冷端长 cold end length (mm)	全长 overall length (mm)	发热部表面积 hot zone surface area(cm²)	额定负荷（1000℃时测试） nominal loading (at 1000℃)		
						电压(V) Voltage	功率(W) Power	电阻(Ω) Resistance
RL121510	12	150	100	350	56	35	890	1.37
RL121515		150	150	450	56	36	920	1.41
RL122010		200	100	400	75	46	1170	1.80
RL122015		200	150	500	75	47	1200	1.84
RL122020		200	200	600	75	49	1250	1.91
RL122510		250	100	450	94	57	1450	2.24
RL122515		250	150	550	94	58	1480	2.27
RL122520		250	200	650	94	60	1530	2.35
RL123010		300	100	500	113	68	1730	2.67
RL123015		300	150	600	113	69	1760	2.74
RL123020		300	200	700	113	71	1810	2.78
RL142020	14	200	200	600	88	47	1480	1.49
RL142520		250	200	650	110	57	1800	1.81
RL142525		250	250	750	110	58	1830	1.84
RL143020		300	200	700	132	68	2140	2.16
RL143025		300	250	800	132	69	2170	2.19
RL143520		350	200	750	154	78	2460	2.48
RL144025		400	250	900	176	90	2840	2.86
RL163020	16	300	200	700	150	63	2390	1.66
RL163025		300	250	800	150	64	2430	1.68
RL163535		350	350	1050	176	76	2890	2.00
RL164025		400	250	900	200	83	3150	2.18
RL164035		400	350	1100	200	86	3270	2.26
RL164525		450	250	950	225	93	3530	2.45
RL165025		500	250	1000	250	103	3910	2.71
RL166025		600	250	1100	300	122	4640	3.21
RL203025	20	300	250	800	188	58	3100	1.08
RL203030		300	300	900	188	59	3160	1.10
RL203040		300	400	1100	188	61	3260	1.14
RL204025		400	250	900	251	76	4070	1.42
RL204030		400	300	1000	251	77	4120	1.44
RL204035		400	350	1100	251	78	4170	1.46
RL204530		450	300	1050	283	85	4550	1.59
RL204540		450	400	1250	283	88	4710	1.64
RL205030		500	300	1100	314	94	5030	1.76
RL205040		500	400	1300	314	97	5190	1.81
RL206030		600	300	1200	376	112	5990	2.09
RL206040		600	400	1400	376	114	6100	2.13
RL207030		700	300	1300	439	130	6960	2.43
RL207040		700	400	1500	439	132	7060	2.47
RL208030		800	300	1400	502	147	7870	2.75
RL209030		900	300	1500	565	165	8830	3.08
RL254030	25	400	300	1000	314	70	5000	0.98
RL254040		400	400	1200	314	71	5080	0.99
RL254045		400	450	1250	353	78	5580	1.09
RL255030		500	300	1100	392	84	6010	1.17
RL255040		500	400	1300	392	86	6150	1.20
RL256030		600	300	1200	470	100	7150	1.40
RL256040		600	400	1400	470	102	7290	1.43
RL257030		700	300	1300	550	116	8290	1.62
RL257040		700	400	1500	550	118	8440	1.65
RL258030		800	300	1400	627	132	9440	1.85
RL258040		800	400	1600	627	134	9580	1.87
RL259030		900	300	1500	705	148	10600	2.07
RL2510030		1000	300	1600	785	164	11700	2.29

电阻公差Resistance tolerance: ±15%

编号 Part No.	直径 Dia (mm)	发热部长 hot zone length (mm)	冷端长 cold end length (mm)	全长 overall length (mm)	发热部表面积 hot zone surface area(cm²)	额定负荷（1000℃时测试） nominal loading (at 1000℃)		
						电压(V) Voltage	功率(W) Power	电阻(Ω) Resistance
RL304030	30	400	300	1000	380	62	5800	0.66
RL305030		500	300	1100	470	77	7200	0.82
RL306030		600	300	1200	570	91	8510	0.97
RL306040		600	400	1400	570	93	8700	0.99
RL307030		700	300	1300	660	106	9900	1.13
RL307040		700	400	1500	660	107	10000	1.14
RL307045		700	450	1600	660	108	10100	1.16
RL308030		800	300	1400	750	120	11200	1.28
RL308040		800	400	1600	750	122	11400	1.30
RL308045		800	500	1800	750	124	11600	1.33
RL309040		900	400	1700	850	136	12700	1.45
RL3010030		1000	300	1600	940	149	13900	1.59
RL3011030		1100	300	1700	1035	164	15300	1.75
RL321436	32	356	280	916	355	52	5315	0.50
RL321638		406	280	965	405	59	6060	0.57
RL321840		457	280	1016	456	66	6820	0.64
RL322042		508	280	1067	507	73	7585	0.71
RL322244		559	280	1118	557	80	8345	0.78
RL322446		610	280	1168	608	88	9110	0.85
RL322648		660	280	1219	659	95	9855	0.92
RL322850		711	280	1270	709	103	10615	0.99
RL323052		762	280	1321	760	110	11380	1.06
RL323263		813	394	1600	811	117	12140	1.13
RL323465		864	394	1651	861	124	12900	1.20
RL323667		914	394	1702	912	131	13650	1.27
RL324071		1016	394	1803	1013	145	15170	1.40
RL324273		1067	394	1854	1063	153	15930	1.47
RL324475		1118	394	1905	1115	160	16690	1.54
RL325789		1448	406	2260	1442	217	21620	2.17
RL325989		1499	381	2260	1493	224	22380	2.25
RL354030	35	400	300	1000	440	64	6850	0.60
RL354040		400	400	1200	440	65	6960	0.61
RL355030		500	300	1100	550	79	8450	0.74
RL355040		500	400	1300	550	80	8560	0.75
RL356030		600	300	1200	660	94	10100	0.88
RL356040		600	400	1400	660	95	10200	0.89
RL357030		700	300	1300	770	109	11700	1.02
RL357040		700	400	1500	770	110	11800	1.03
RL358030		800	300	1400	880	124	13300	1.16
RL358040		800	400	1600	880	125	13400	1.17
RL359030		900	300	1500	990	139	14900	1.30
RL359040		900	400	1700	990	140	15000	1.31
RL3510030		1000	300	1600	1100	154	16500	1.44
RL3510040		1000	400	1800	1100	155	16600	1.45
RL3511030		1100	300	1700	1210	169	18100	1.58
RL3511040		1100	400	1900	1210	170	18200	1.59
RL3512030		1200	300	1800	1320	184	19700	1.72
RL3512040		1200	400	2000	1320	185	19800	1.73
RL3513030		1300	300	1900	1430	198	21200	1.85
RL3513040		1300	400	2100	1430	200	21400	1.87
RL3514030		1400	300	2000	1540	213	22800	1.99
RL3514040		1400	400	2200	1540	215	23000	2.01
RL3515030		1500	300	2100	1650	228	24400	2.13
RL3515040		1500	400	2300	1650	230	24600	2.15
RL3516030		1600	300	2200	1760	243	26000	2.27
RL3517030		1700	300	2300	1870	258	27600	2.41

电阻公差Resistance tolerance: ±15%

编号 Part No.	直径 Dia (mm)	发热部长 hot zone length (mm)	冷端长 cold end length (mm)	全长 overall length (mm)	发热部表面积 hot zone surface area(cm²)	额定负荷（1000℃时测试） nominal loading (at 1000℃)		
						电压(V) Voltage	功率(W) Power	电阻(Ω) Resistance
RL381638	38.1	406	280	965	487	54	7285	0.40
RL381840		457	280	1016	547	61	8200	0.45
RL382042		508	280	1067	608	67	9115	0.49
RL382244		559	280	1118	669	74	10030	0.54
RL382446		610	280	1168	730	80	10950	0.59
RL382648		660	280	1219	791	86	11840	0.63
RL382850		711	280	1270	851	93	12760	0.68
RL383052		762	280	1321	912	100	13675	0.73
RL383263		813	394	1600	973	106	14590	0.78
RL383465		864	394	1651	1034	113	15505	0.83
RL383667		914	394	1702	1095	119	16400	0.87
RL383869		965	394	1753	1155	126	17320	0.92
RL383967		990	356	1702	1185	129	17774	0.94
RL384071		1016	394	1803	1216	132	18230	0.97
RL384475		1118	394	1905	1338	146	20060	1.07
RL384879		1219	394	2007	1459	159	21875	1.16
RL385283		1312	394	2108	1581	172	23705	1.26
RL385687		1422	394	2210	1702	186	25520	1.36
RL405030	40	500	300	1100	628	73	9560	0.56
RL405040		500	400	1300	628	75	9830	0.57
RL406030		600	300	1200	753	87	11400	0.66
RL406040		600	400	1400	753	89	11700	0.68
RL407030		700	300	1300	880	101	13200	0.77
RL407040		700	400	1500	880	103	13500	0.79
RL408030		800	300	1400	1005	115	15100	0.88
RL408040		800	400	1600	1005	116	15200	0.89
RL409030		900	300	1500	1130	129	16900	0.98
RL409040		900	400	1700	1130	130	17000	0.99
RL4010030		1000	300	1600	1255	143	18700	1.09
RL4010040		1000	400	1800	1255	144	18900	1.10
RL4011030		1100	300	1700	1381	157	20600	1.20
RL4011040		1100	400	1900	1381	158	20700	1.21
RL4012030		1200	300	1800	1506	170	22300	1.30
RL4012040		1200	400	2000	1506	172	22500	1.31
RL4013030		1300	300	1900	1630	184	24100	1.40
RL4013040		1300	400	2100	1630	186	24400	1.42
RL4014030		1400	300	2000	1760	198	25900	1.51
RL4014040		1400	400	2200	1760	200	26200	1.53
RL4015030		1500	300	2100	1880	212	27800	1.62
RL4015040		1500	400	2300	1880	213	27900	1.63
RL4016030		1600	300	2200	2010	226	29600	1.73
RL4017030		1700	300	2300	2140	240	31400	1.83
RL4022065		2200	650	3500	2763	317	41450	2.42
RL4026060		2600	600	3800	3266	374	48990	2.86
RL452042	45	508	280	1067	708	61	10625	0.36
RL452253		559	394	1346	780	68	11690	0.40
RL452448		610	305	1219	851	74	12760	0.43
RL452649		660	293	1245	921	81	13805	0.47
RL452859		711	394	1499	992	87	14970	0.51
RL453061		762	394	1549	1063	93	15935	0.55
RL453263		813	394	1600	1134	99	17000	0.59
RL453465		864	394	1651	1205	104	18070	0.61
RL453667		914	394	1702	1275	112	19115	0.65
RL453869		965	394	1753	1346	118	20180	0.70

电阻公差Resistance tolerance: ±15%

编号 Part No.	直径 Dia (mm)	发热部长 hot zone length (mm)	冷端长 cold end length (mm)	全长 overall length (mm)	发热部表面积 hot zone surface area(cm²)	额定负荷（1000℃时测试） nominal loading (at 1000℃)		
						电压(V) Voltage	功率(W) Power	电阻(Ω) Resistance
RL453972	45	991	419	1829	1382	120	20725	0.69
RL454071		1016	394	1803	1417	122	21250	0.70
RL454477		1118	419	1956	1560	136	23380	0.80
RL454882		1219	432	2083	1700	148	25490	0.87
RL455081		1270	394	2057	1772	155	26560	0.92
RL455181		1295	381	2057	1806	155	27082	0.89
RL455283		1321	394	2108	1843	161	27625	0.95
RL455485		1372	394	2159	1914	168	28690	1.00
RL455687		1422	394	2210	1984	173	29740	1.03
RL455889		1473	394	2261	2055	180	30805	1.07
RL456091		1524	394	2311	2126	186	31870	1.10
RL456295		1575	419	2413	2197	192	32940	1.15
RL456495		1626	394	2413	2268	197	34005	1.17
RL456699		1676	419	2515	2338	205	35050	1.24
RL456894		1829	280	2388	2551	218	38250	1.24
RL4596129		2438	419	3277	3401	291	50985	1.66
RL45118169		3000	650	4300	4239	365	63585	2.10
RL5010040	50	1000	400	1800	1570	123	22800	0.70
RL5015040		1500	400	2300	2360	182	33800	1.00
RL5017040		1700	400	2500	2670	205	38200	1.10
RL5020040		2000	400	2800	3140	241	44800	1.30
RL542044	54	508	305	1118	862	62	12920	0.30
RL542139		533	229	991	904	66	13555	0.32
RL542246		559	305	1168	948	69	142220	0.33
RL542448		610	305	1219	1035	75	15515	0.36
RL542650		660	305	1270	1120	80	16785	0.38
RL542749		686	280	1245	1164	84	17450	0.40
RL542852		711	305	1321	1206	88	18085	0.42
RL543054		762	305	1372	1293	93	19380	0.44
RL543265		813	419	1651	1379	99	20675	0.49
RL543467		864	419	1702	1466	105	21975	0.51
RL543669		914	420	1753	1551	112	23250	0.54
RL543871		965	419	1803	1637	226	24545	0.57
RL544073		1016	419	1854	1724	123	25840	0.60
RL544275		1067	419	1905	1810	129	27140	0.63
RL544477		1118	419	1956	1897	135	28435	0.66
RL544576		1143	394	1930	1939	139	29070	0.67
RL544679		1168	420	2007	1982	142	29710	0.69
RL544884		1219	458	2134	2068	147	31005	0.71
RL545083		1270	419	2108	2155	153	32300	0.74
RL545285		1321	419	2159	2241	159	33600	0.77
RL545487		1372	419	2210	2328	166	34895	0.80
RL545689		1422	420	2261	2412	171	36170	0.82
RL545891		1473	419	2311	2499	179	37465	0.85
RL545977		1499	229	1956	2543	175	38125	0.80
RL546091		1524	394	2311	2585	184	38760	0.89
RL546295		1575	419	2413	2671	189	40060	0.90
RL546497		1626	419	2464	2758	196	41355	0.94
RL546586		1651	267	2184	2801	198	41990	0.93
RL546699		1676	420	2515	2843	202	42630	0.97
RL5468101		1727	419	2565	2930	207	43925	0.99
RL5470103		1778	419	2616	3016	213	45220	1.01
RL547498		1880	305	2489	3189	225	47815	1.06
RL547498		1880	305	2489	3189	225	47815	1.06
RL547898		1981	254	2489	3361	238	50385	1.12
RL548099		2032	242	2515	3447	244	51680	1.15
RL5482108		2083	330	2743	3534	250	52980	1.18
RL5483104		2108	267	2642	3576	253	53615	1.19
RL5484103		2134	241	2616	3620	255	54275	1.20
RL5485120		2159	445	3048	3663	260	54910	1.23
RL5490117		2286	343	2972	3878	274	58140	1.29
RL5491124		2311	420	3150	3921	279	58780	1.32
RL5495116		2413	267	2946	4094	290	61370	1.37
RL5496129		2438	420	3277	4136	295	62010	1.40

电阻公差Resistance tolerance: ±15%

U型Type U

编号 Part No.	直径 Dia (mm)	发热部长 hot zone length (mm)	冷端长 cold end length (mm)	间距 leg center distance (mm)	发热部表面积 hot zone surface area(cm²)	额定负荷（1000℃时测试） nominal loading (at 1000℃)		
						电压(V) Voltage	功率(W) Power	电阻(Ω) Resistance
U163030	16	300	300	40	301	121	4600	3.18
U164030		400	300		402	160	6080	4.21
U164040		400	400		402	163	6190	4.29
U165030		500	300		502	200	7600	5.26
U203040	20	300	400	50	377	112	5990	2.09
U203540		350	400		440	130	6960	2.43
U204040		400	400		502	147	7870	2.75
U204535		450	350		565	164	8770	3.07
U205040		500	400		628	183	9790	3.42
U205050		500	500		628	185	9900	3.46
U206040		600	400		754	218	11700	4.07
U206050		600	500		754	220	11800	4.11
U207040		700	400		879	253	13500	4.73
U207050		700	500		879	256	13700	4.79
U208040		800	400		1005	289	15500	5.40
U208050		800	500		1005	291	15600	5.44
U254040	25	400	400	60	628	131	9370	1.83
U254050		400	500		628	133	9510	1.86
U254540		450	400		707	147	10500	2.06
U255040		500	400		785	163	11700	2.28
U155050		500	500		785	165	11800	2.31
U255540		550	400		864	179	12800	2.50
U256040		600	400		942	194	13900	2.71
U256050		600	500		942	196	14000	2.74
U257040		700	400		1099	226	16200	3.16
U257050		700	500		1099	228	16300	3.19
U258040		800	400		1256	258	18500	3.61
U258050		800	500		1256	260	18600	3.64
U305040	30	500	400	70	942	148	13800	1.58
U305050		500	500		942	149	13900	1.59
U306040		600	400		1130	176	16500	1.88
U306050		600	500		1130	178	16600	1.90
U307040		700	400		1318	205	19200	2.19
U307050		700	500		1318	207	19400	2.21
U308040		800	400		1508	234	21900	2.50
U308050		800	500		1508	236	22100	2.52
U309040		900	400		1695	263	24600	2.81
U309050		900	500		1695	265	24800	2.83
U3010050		1000	500		1884	294	27500	3.14
U356040	35	600	400	80	1319	180	19100	1.68
U356050		600	500		1319	182	19400	1.70
U357040		700	400		1539	210	22200	1.96
U357050		700	500		1539	212	22400	1.98
U358040		800	400		1758	240	25400	2.24
U358050		800	500		1758	241	25600	2.26
U359040		900	400		1978	270	28600	2.52
U359050		900	500		1978	271	28800	2.54
U3510050		1000	500		2198	301	32000	2.82

电阻公差Resistance tolerance: ±15%

单螺纹型Type SG

直径 Dia mm	额定负荷（1000℃时测试） Nominal loading (at 1000C)			
	发热部Hot Zone		冷端Cold End	
	Ω/mm	W/mm	Ω/mm	W/mm
12	0.00909	5.65	0.00192	0.25
14	0.00885	6.59	0.00150	0.30
16	0.00698	7.54	0.00129	0.50
20	0.00559	9.42	0.00097	0.60
25	0.00455	11.78	0.00058	0.93
30	0.00340	14.13	0.00040	0.95
32	0.00314	14.93	0.00038	0.97
35	0.00223	16.49	0.00032	0.98
38	0.00214	17.95	0.00025	0.99
40	0.00208	18.84	0.00024	1.00
45	0.00182	20.91	0.00022	1.02

电阻公差Resistance tolerance: ±20%

双螺纹型Type SGR

直径 Dia mm	额定负荷（1000℃时测试） Nominal loading (at 1000C)			
	发热部Hot Zone		冷端Cold End	
	Ω/mm	W/mm	Ω/mm	W/mm
16	0.03153	7.54	0.00791	1.40
18	0.02158	8.48	0.00430	1.50
20	0.02302	9.42	0.00384	1.60
25	0.01969	11.78	0.00328	1.75
30	0.01523	14.13	0.00190	1.75
32	0.01341	14.93	0.00152	1.85
35	0.01224	16.49	0.00150	2.00
38	0.01103	17.95	0.00116	2.00
40	0.00905	18.84	0.00100	2.10
45	0.00960	20.91	0.00079	2.10
50	0.00953	23.55	0.00075	2.20
54	0.00636	25.43	0.00073	2.30

电阻公差Resistance tolerance: ±20%

Type DB 粗端型

发热部 Hot Zone			冷端 Cold end		全长 Overall lenght (mm)	电阻 Resistance at 1400C (Ω)	不同温度时最大允许的负荷值，功率W，电压V，电流A Max loads value Watts (over the dash), Voltage (V) Current (A) at temperature of					
直径 Dia (mm)	长度 Lenght (mm)	表面积 Surface (cm2)	直径 Dia (mm)	长度 Lenght (mm)			1100°C	1200°C	1250°C	1300°C	1350°C	1400°C
8	150	38	14	150	450	3.60	900	790	675	520	380	190
							57/15.8	53/14.7	49/13.8	43/12.0	37/10.3	26/7.2
8	180	45	14	60	300	4.40	1080	950	815	635	460	230
							69/15.7	65/14.7	60/13.8	53/12.0	45/10.2	32/2.7
8	180	45	14	150	480	4.40	1080	950	815	635	460	230
							69/15.7	65/14.7	60/13.8	53/12.0	45/10.2	32/2.7
14	200	88	22	250	700	1.80	2110	1850	1570	1230	880	440
							62/34.0	58/32.0	53/29.6	47/26.6	40/22.0	28/15.7
14	250	11	22	250	750	2.20	2640	2310	1980	1540	1100	550
							76/34.7	71/32.6	66/30.0	58/26.6	49/22.4	35/15.8
14	250	11	22	350	950	2.20	2640	2310	1980	1540	1100	550
							76/34.7	71/32.6	66/30.0	58/26.6	49/22.4	35/15.8
14	300	132	22	250	800	2.60	3160	2770	2370	1850	1320	650
							90/34.8	85/32.6	78/30.4	69/26.7	59/22.4	41/15.8
14	300	132	22	350	1.000	2.60	3160	2770	2370	1850	1320	650
							90/34.8	85/32.6	78/30.4	69/26.7	59/22.4	41/15.8
14	400	176	22	250	900	3.50	4200	3680	3150	2450	1750	875
							121/34.7	113/32.5	105/30.0	93/26.4	78/22.5	55/15.9
14	400	176	22	350	1.100	3.50	4200	3680	3150	2450	1750	875
							121/34.7	113/32.5	105/30.0	93/26.4	78/22.5	55/15.9
18	250	141	28	250	750	1.30	3370	2960	2540	1970	1410	700
							66/51.2	62/47.8	57/44.5	51/38.8	43/32.8	30/23.3
18	250	141	28	350	950	1.30	3370	2960	2540	1970	1410	700
							66/51.2	62/47.8	57/44.5	51/38.8	43/32.8	30/23.3
18	300	170	28	250	800	1.70	4080	3570	3060	2380	1700	850
							83/49.2	78/45.8	72/42.5	64/37.2	54/31.5	38/22.4
18	300	170	28	350	1.000	1.70	4080	3570	3060	2380	1700	850
							83/49.2	78/45.8	72/42.5	64/37.2	54/31.5	38/22.4
18	400	226	28	250	900	2.30	5400	4740	4060	3160	2260	1130
							111/48.6	104/45.6	97/41.9	85/37.2	72/31.4	51/22.2
18	400	226	28	350	1.100	2.30	5400	4740	4060	3160	2260	1130
							111/48.6	104/45.6	97/41.9	85/37.2	72/31.4	51/22.2
18	500	283	28	350	1.200	2.70	6800	5960	5100	3840	2860	1420
							135/50.4	127/47.0	117/43.6	102/37.6	88/32.5	62/23.0
18	600	339	28	250	1.100	3.40	8150	7140	6130	4760	3400	1700
							166/49.0	156/45.7	144/42.7	127/37.6	107/31.8	76/22.4
18	600	339	28	350	1.300	3.40	8150	7140	6130	4760	3400	1700
							166/49.0	156/45.7	144/42.7	127/37.6	107/31.8	76/22.4
18	800	452	28	250	1.300	4.60	10800	9500	8140	6340	4530	2260
							222/48.8	208/45.7	193/42.1	171/37.1	144/31.5	102/22.1
18	800	452	28	350	1.500	4.60	10800	9500	8140	6340	4530	2260
							222/48.8	208/45.7	193/42.1	171/37.1	144/31.5	102/22.1
25	300	236	35	400	1.100	1.00	6040	4880	4080	3150	2180	1175
							77.8/77.8	66.9/66.9	64/64	56.2/56.2	46.7/46.7	34.3/34.3
25	400	314	35	400	1.200	1.34	7350	6920	5660	4400	3140	1760
							99/76	95/73	86/66	76/58	64/49	48/36.5
30	500	472	45	400	1.300	1.10	10800	9870	8450	6570	4700	2350
							109/99	104/95	96/88	85/77.3	72/65.4	51/46.2
30	600	566	45	600	1.400	1.28	13500	11800	10300	7900	5660	2820
							132/102	123/96	116/89	102/77.5	86/66	61/46.5
30	1.000	942	45	500	2.000	2.10	22000	19800	17000	13200	9400	4700
							214/103	204/97	189/90	160/79	140/67	100/47

电阻公差Resistance tolerance: ±15%

Risesun Super
二硅化钼电热元件
$MoSi_2$ Heating Elements

二硅化钼电热元件是一种以硅化钼为基础的电阻发热元件，其在氧化气氛下加热到高温，表面生成一层致密的石英玻璃膜，保护其不再氧化。因此，其具有独特的高温抗氧化性。在氧化气氛下，其最高温度可达1800℃，其适用温度为500~1700℃，可以用作陶瓷、磁性材料、玻璃、冶金、耐火材料等工业高温炉的加热元件。

$MoSi_2$ heating element is a type of resistance heating element composed of high purity Molybdenum Disilicide. When heated to a high temperature in an oxidizing atmosphere, a layer of compact quartz glass forms on the surface of the element which withstands oxidation. In an oxidizing atmosphere, its maximum temperature can reach 1800℃, and its applicable temperature is 500~1700℃. It can be widely used as heating elements in high temperature furnaces for a variety of industries including ceramics, magnets, glass, metallurgy, refractory and many others. We named our MoSi2 heating elements as Risesun Super.

我们最新研发的Risesun Super 1850高品质元件，是选用高纯度的钼粉和硅粉并采用全程防氧化工艺，具有使用温度高、强度大、外观漂亮等优点，最高元件温度可达1830℃，最高炉温可达1750℃。关于产品的详细情况请联系我们。

Risesun Super 1850 is the latest super quality element researched and developed by us, which adopts high purity Molybdenum and Silicon powder and with whole process anti-oxidation. Risesun Super 1850 has the advantages of higher service temperature, and higher tensile strength. Its maximum service temperature is 1830℃ and it can sustain furnace temperatures of 1750℃. For more details of Risesun Super 1850, do not hesitate to contact us.

二硅化钼电热元件的标志法
Marks of elements

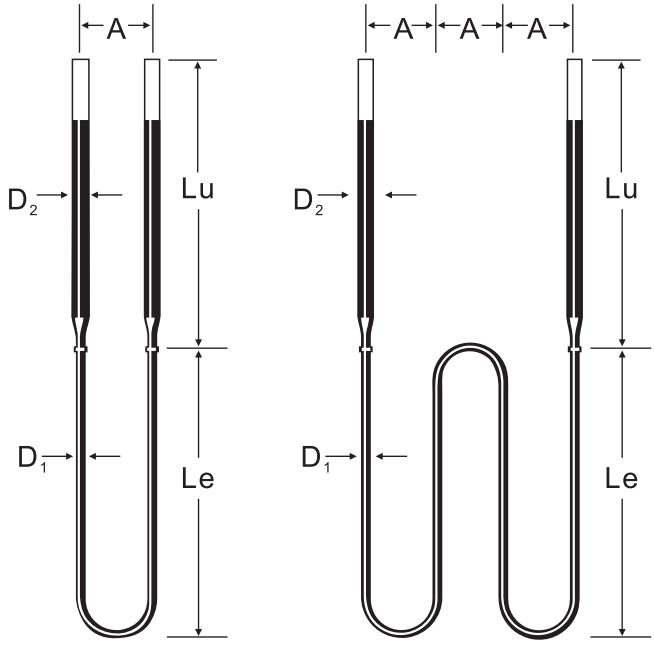

材料等级Material Grade：1700, 1800

直径 Diameter：D_1/D_2, mm/mm

热端长度 Hot zone length：Le, mm

冷端长度Cold end length：Lu, mm

间距Shank Spacing：A, mm

例如Examples：

U型Shape, 材料等级Material Grade 1800,

D_1=3mm, D_2=6mm, Le=140mm,

Lu=125mm, A=25mm

表示为Specify:

Risesun Super RS18, U, 3/6×140×125×25

W型Shape, 材料等级Material Grade 1700, D_1=6mm,

D_2=12mm, Le=300mm, Lu=250mm, A=50m

表示为Specify:

Risesun Super RS17, W, 6/12×300×250×50

二硅化钼电热元件的理化性质
Physical and chemical properties

1．物理性质Physical properties

体积密度 Bulk density	抗折强度 Rupture strength	维氏硬度 Vickers-hardness	气孔率 Porosity	吸水率 Water absorption	热伸长率 Thermal elongation
5.5~5.6g/cm^3	15-25kg/cm^2	(HV)570kg/mm^2	7.4%	1.2%	4%

2．化学性质Chemical properties

高温抗氧化性：高温氧化气氛下，元件的表面生成一层致密的石英(SiO_2)保护层以防止$MoSi_2$继续氧化。当元件温度大于1700°C，熔点为1710°C的SiO_2保护层熔融，由于表面的张力的作用，SiO_2熔聚成滴，而失去保护作用。元件在氧化气氛下，再继续使用时，SiO_2保护层重新生成。

Anti–oxidation：Exposed to high temperatures in an oxidizing atmosphere, a layer of quartz glass (SiO_2) protective film forms on the surface of element which prevents $MoSi_2$ from continuously oxidizing. When the element temperature is higher than 1700℃, the protective film will be fused to molten drops and lose its protective function because the fusion point of SiO_2 is 1710℃. In the oxidizing atmosphere, when the element is used continuously, the protective film forms again.

必须指出的是元件不宜在400-700°C范围内长时间使用。否则元件会因低温的强烈氧化作用而粉化。

It is inadvisable to operate the elements in the 400–700℃, otherwise, it will be powdered because of strong oxidation due to low temperatures.

3．不同气氛对元件温度的影响Affects from different atmospheres

气　氛 Atmosphere	最大元件温度Max element temperature	
	Risesun Super RS17	Risesun Super RS18
空气Air	1700℃	1800℃
氮气Nitrogen	1600℃	1700℃
氩气, 氦气Argon, Helium	1600℃	1700℃
氢气Hydrogen	1100~1450℃	1100~1450℃
N2/H2 95/5%	1250~1600℃	1250~1600℃

二硅化钼电热元件的电气性质
Electric properties

1. 电阻特性 Temperature dependence of resistivity

二硅化钼电热元件的电阻率随着温度的升高而迅速增加。在正常操作情况下，元件电阻一般不随使用时间的长短而变化。因此，新旧元件可以混合使用。

The resistance of the element increases sharply as the temperature rises. Under normal operating conditions, the element resistance doesn't change as it ages. Subsequently, old and new elements can be used with no problems.

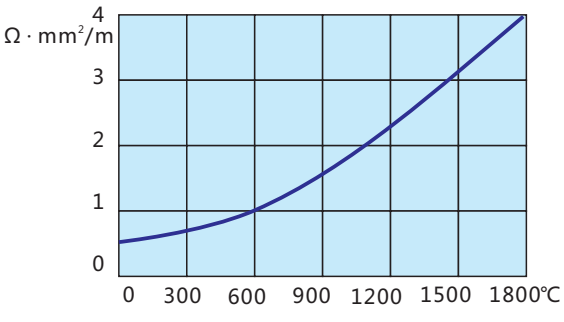

1700等级和1800等级元件的电阻-温度曲线
Resistance vs. Element Temperature for Risesun Super RS17 and RS18 Elements

2．表面负荷Surface load

根据炉子的结构、气氛和温度正确地选择元件的表面负荷是达到最好元件寿命的关键。下图示出了元件辐射在不受阻碍情况下的炉温、元件温度与表面负荷间的关系，阴影部分为常用的表面负荷---温度范围。

The key factor for best service life of the element is to choose the surface load of the element in relation to the furnace construction, atmosphere and temperature. The figure below shows the relationship between furnace temperatures, element temperature and element surface load under conditions without radiation. The shadow part in the figure shows the surface load–– temperature range in common use. The figure still shows the reference current.

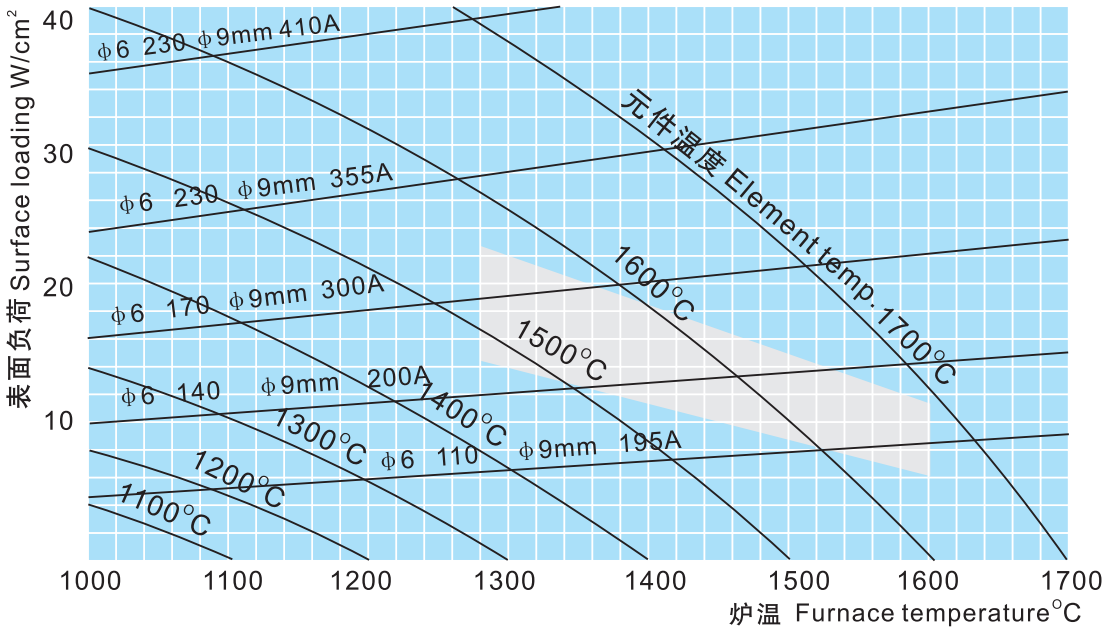

推荐的表面负荷Recommend surface load:

炉温 (°C) Furnace Temperature	1400	1500	1600	1650	1700
发热部表面负荷 Surface load of hot zone (W/cm²)	<18	<15	<12	<10	<8

二硅化钼电热元件的安装 Installation

1、垂直悬挂Vertical installation

二硅化钼电热元件常温下脆性很大，高温时又有可塑性。所以U型元件的最好安装方法是垂直悬挂，通过支撑夹头将元件垂直悬挂于炉顶上。这样安装的目的就是避免将机械应力加到元件发热端上，否则容易引起元件断裂。

At room temperature, a MoSi2 element is very brittle, while at high temperatures, it is quite plastic. Subsequently, the best way to install the U Shape element is vertically from the furnace crown utilizing the support clamp. This avoids mechanical stress directly on the element hot zone which can cause the element to be broken.

2、固定夹Element holder

整个元件的重量都是由固定夹承担，元件的位置也由它决定。因此，必须仔细安装，保证元件垂直悬挂。为避免局部过热，元件下端圆锥部分一定要伸到炉膛内。

The element holder bears the entire weight of the element and determines the position of the element. Therefore, it must be installed very carefully to ensure the element is plumb. In order to prevent the element from partly overheating, the taper part of the element lower end must be installed in the actual furnace chamber and never in the furnace crown.

3、连接带Connection strap

接触元件的导线采用铝编织线或多层铝箔。外面的钢板只起夹紧作用，不用来导电。导线的末端与母线联结。为了避免应力传到元件上，导线应略大于元件和母线间的直线距离。

The connection strap is made of aluminum braid wire or multi-layer aluminum foil. The outside clamp is not for electrical conduction but only for securing the element. The end of strap should be a little larger than the linear distance between the element and bus.

安装元件时夹头上的螺丝不要一次拧的太紧，待元件升到高温时再次拧紧，因为这时元件有一定塑性不易折断。夹头部分温度一般不要高于200°C。因此，夹头导线与元件接触电压应降低0.1V。为避免幅射热传到夹头，夹头下端和穿砖上面的距离不应小于50mm。为了避免损坏，一般直径6/12mm元件不能长期使用170A，直径9/18mm元件不能长期使用300A。

When the element is installed initially, do not over tighten it. It should be tightened when the element rises up to high temperature when the element has some plastic property, to avoid having the elements break easily. The temperature to the wire clip generally should not be higher than 200℃. Therefore, the contact voltage between the clip wire and element should be lowered 0.1V. In order to avoid heat radiation conducting to the clip, the distance between the lower end of the clip and upper surface of brick should not less than 50mm. Generally for 6/12 element, 170A should not be used long time, and for 9/18 one, 300A shouldn't be used long time.

二硅化钼电热元件的附件
Accessories of elements

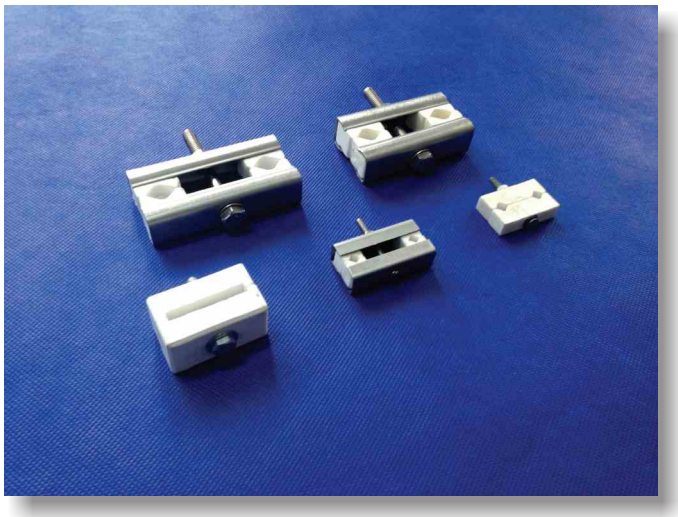

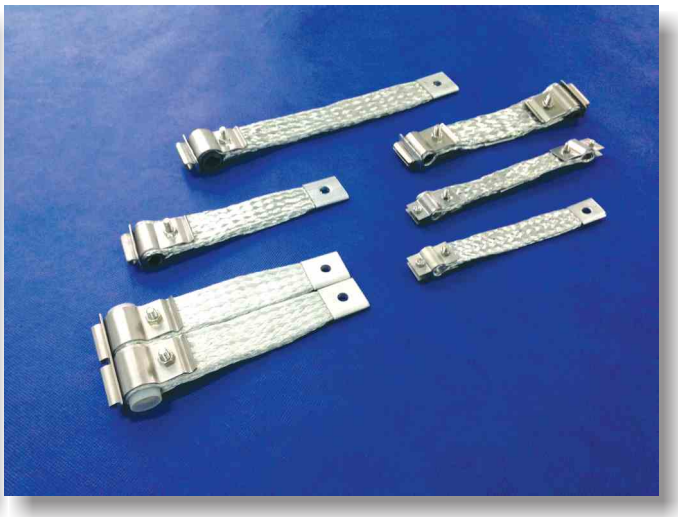

用于3/6和4/9元件的固定夹
Element holders for 3/6and4/9 elements

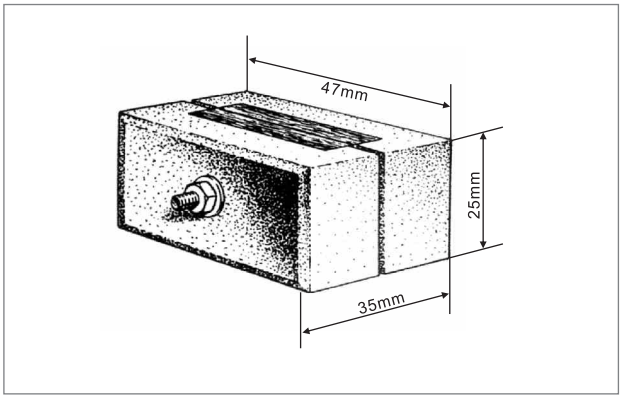

用于6/12和9/18元件的固定夹
Element holders for 6/12and9/18 elements

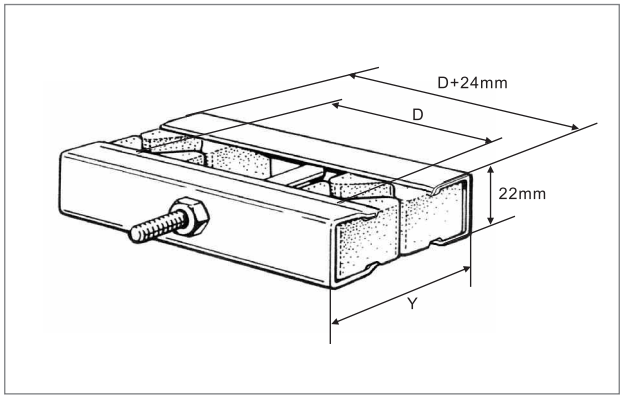

用于3/6和4/9元件的连接带
Connecting straps for 3/6and4/9 elements

单环E-P type

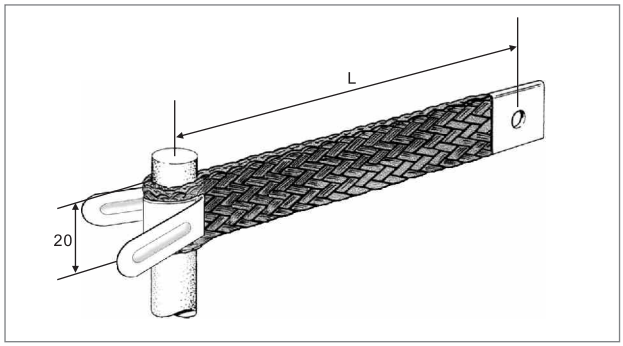

用于元件与电源的连接
Used for element to power

双环E-E type

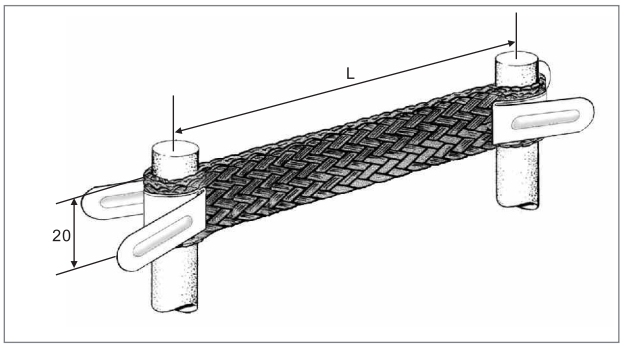

用于元件与元件的连接
Used for element to element

用于6/12和9/18元件的连接带
Connecting straps for 6/12and9/18 elements

单环E-P type

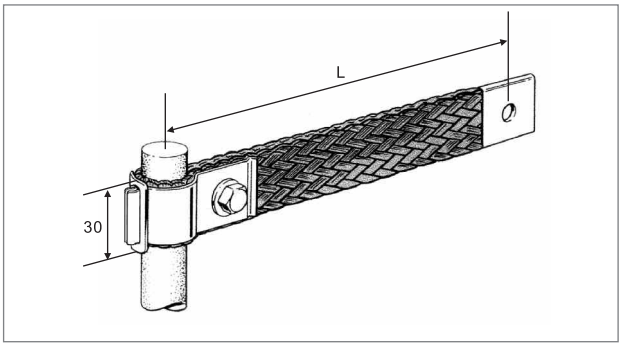

用于元件与电源的连接
Used for element to power

双环E-E type

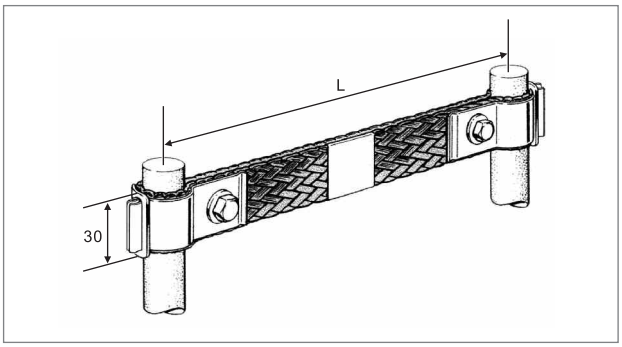

用于元件与元件的连接
Used for element to element

二硅化钼炉子的操作
Operation of $MoSi_2$ furnace

1、炉子的干燥Drying of the furnace

新砌筑或长期不用的炉子在使用前需要干燥。一般干燥温度为100-200°C，而元件长期在低温下使用将会引起低温氧化。小型炉子干燥时间短，几个小时对元件影响不大。大型炉子干燥时间长，需要注意。为了通风，最好将炉门打开，随着温度升高可以半开，到1000°C以上完全关闭炉门。

In a New furnace or a furnace that has been shut down for a prolonged period of time should be dried bringing the temperature up. The drying temperature generally is 100–200℃. The element will however oxidize if run at low temperatures long periods of time. For the small–size furnace, as its drying time is short, several hours will not affect the element significantly but for the larger one, as its drying time is drawn out it requires more substantial monitoring. It’s better to open the furnace door to allow moisture to escape. The door may be half–opened as the temperature rises and fully closed when the temperature rises above 1000℃.

2、炉子的启动Furnace starting

如果炉子干燥好了或不需要干燥就可以启动升温，为了避免过大电流冲击而使电器设备过荷，应采用下列步骤起动：

If the furnace is fully dried or doesn't need to be dried, in order to avoid electric devices overload due to heavy amperage draws, the following steps are recommended:

小型炉子Small furnace （功率power <100KW）		大型炉子Large furnace （功率power 100-500KW）	
炉温. Furnace temp.	电压 Voltage	炉温. Furnace temp.	电压 Voltage
20-150℃	1/3工作电压 Working voltage	20-300℃	1/3工作电压 Working voltage
150-500℃	2/3工作电压 Working voltage	300-700℃	2/3工作电压 Working voltage
500℃-工作温度 Working temp.	全工作电压 Full working voltage	700℃-工作温度 Working temp.	全工作电压 Full working voltage

3、元件的更换Replacing of elements

在操作过程中发现元件损坏应首先确定位置，同时准备好组合元件。然后将损坏的元件夹头导线与母线连结的螺丝松开，清理开陶瓷棉，连用穿砖一起拔出来，再将新组合元件从炉顶插入，连结好导线，堵好陶瓷棉即可升温。

If it is found that an element has been damaged during operation, the first step is to find out which element is damaged and that can be done by checking the continuity of the element at the cold zone ends, but the element must be isolated from other elements to do this. The straps must be disconnected from other straps. Do not remove the straps from the fragile element being checked but do isolate it. This can be checked with a multimeter in the "Ohms" position. Continue to check each element until you find the one without continuity. Then with the straps detached from the buss, clear out the ceramic fiber and pull it with the passage brick. Finally, insert the new element from the furnace top, link the lead wire, block the gap with ceramic fiber and restart the power to the element bank.

二硅化钼电热元件参考数据
Reference data of Risesun Super heating elements

1、1800等级3/6mm的U型元件
1800 Grade U type 3/6mm elements

热端 Le / 冷端 Lu	150	180	200	250	300	350
150	376 0.186 8.4	376 0.186 8.4	376 0.186 8.4	376 0.186 8.4	376 0.186 8.4	376 0.186 8.4
200	391 0.193 8.7	391 0.193 8.7	391 0.193 8.7	391 0.193 8.7	391 0.193 8.7	391 0.193 8.7
250	405 0.200 9.0	405 0.200 9.0	405 0.200 9.0	405 0.200 9.0	405 0.200 9.0	405 0.200 9.0
270	411 0.203 9.1	411 0.203 9.1	411 0.203 9.1	411 0.203 9.1	411 0.203 9.1	411 0.203 9.1
300	420 0.207 9.3	420 0.207 9.3	420 0.207 9.3	420 0.207 9.3	420 0.207 9.3	420 0.207 9.3

条件Condition:
元件温度Element temperature 1700℃
炉子温度Furnace temperature 1600℃
电流Current 45A
表面负荷Surface load 11.5W/cm2

功率Power W
电阻Resistance Ω
电压Voltage V

2、1800等级4/9mm的U型元件
1800 Grade U type 4/9mm elements

热端 Le / 冷端 Lu	150	180	200	250	300	350
150	492 0.116 7.6	579 0.137 8.9	637 0.151 9.8	781 0.185 12.0	925 0.219 14.2	1070 0.253 16.5
200	507 0.120 7.8	594 0.141 9.1	652 0.154 10.0	796 0.188 12.2	940 0.223 14.5	1085 0.257 16.7
250	522 0.124 8.0	609 0.144 9.4	667 0.158 10.3	811 0.192 12.5	955 0.226 14.7	1100 0.260 16.9
270	528 0.125 8.1	615 0.146 9.5	673 0.159 10.3	817 0.193 12.6	961 0.228 14.8	1106 0.262 17.0
300	537 0.127 8.3	624 0.148 9.6	682 0.161 10.5	826 0.195 12.7	970 0.230 14.9	1115 0.264 17.2

条件Condition:
元件温度Element temperature 1700℃
炉子温度Furnace temperature 1600℃
电流Current 45A
表面负荷Surface load 11.5W/cm2

功率Power W
电阻Resistance Ω
电压Voltage V

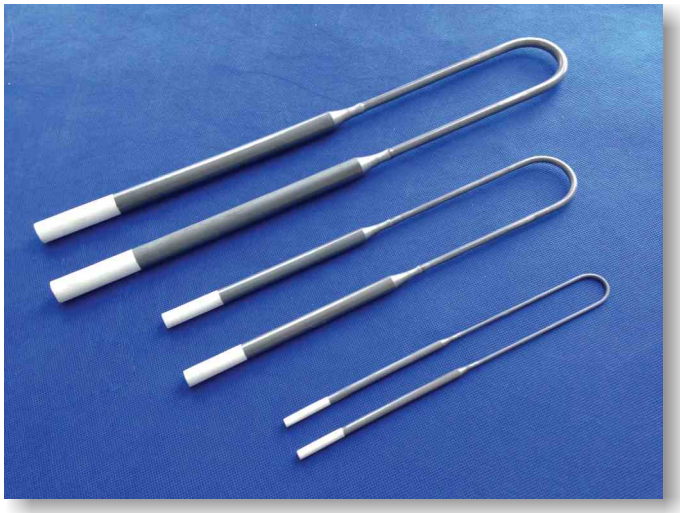

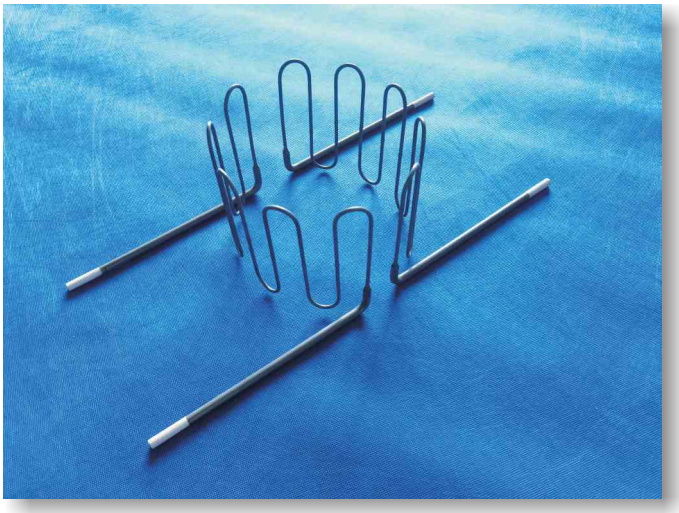

3、 1700等级6/12mm的U型元件 1700 Grade U type 6/12mm elements

热端 Le / 冷端 Lu	150	180	200	250	300	350	400	450	500	550	600
150	987 0.044 6.6	1152 0.051 7.7	1262 0.056 8.4	1536 0.068 10.2	1810 0.080 12.1	2084 0.093 13.9					
200	1025 0.046 6.8	1189 0.053 7.9	1299 0.058 8.7	1573 0.070 10.5	1848 0.082 12.3	2122 0.094 14.1	2396 0.106 16.0	功率Power W 电阻Resistance Ω 电压Voltage V			
250	1062 0.047 7.1	1227 0.055 8.2	1337 0.059 8.9	1611 0.072 10.7	1885 0.084 12.6	2159 0.096 14.4	2433 0.108 16.2	2708 0.120 18.1			
270	1077 0.048 7.2	1242 0.055 8.3	1352 0.060 9.0	1626 0.072 10.8	1900 0.084 12.7	2174 0.097 14.5	2448 0.109 16.3	2723 0.121 18.2	2997 0.133 20.0		
300	1100 0.049 7.3	1264 0.056 8.4	1374 0.061 9.2	1648 0.073 11.0	1923 0.085 12.8	2197 0.098 14.6	2471 0.110 16.5	2745 0.122 18.3	3019 0.134 20.1	3294 0.146 22.0	3568 0.159 23.8
350	1137 0.051 7.6	1302 0.058 8.7	1412 0.063 9.4	1686 0.075 11.2	1960 0.087 13.1	2234 0.099 14.9	2508 0.111 16.7	2783 0.124 18.6	3057 0.136 20.4	3331 0.148 22.2	3605 0.160 24.0
400	1175 0.052 7.8	1339 0.060 8.9	1449 0.064 9.7	1723 0.077 11.5	1998 0.089 13.3	2272 0.101 15.1	2546 0.113 17.0	2820 0.125 18.8	3094 0.138 20.6	3369 0.150 22.5	3643 0.162 24.3
450		1377 0.061 9.2	1487 0.066 9.9	1761 0.078 11.7	2035 0.090 13.6	2309 0.103 15.4	2583 0.115 17.2	2858 0.127 19.1	3132 0.139 20.9	3406 0.151 22.7	3680 0.164 24.5
500				1798 0.080 12.0	2073 0.092 13.8	2347 0.104 15.6	2621 0.116 17.5	2895 0.129 19.3	3169 0.141 21.1	3444 0.153 23.0	3718 0.165 24.8
550					2110 0.094 14.1	2384 0.106 15.9	2658 0.118 17.7	2933 0.130 19.6	3207 0.143 21.4	3481 0.155 23.2	3755 0.167 25.0
600					2148 0.095 14.3	2422 0.108 16.1	2696 0.120 18.0	2970 0.132 19.8	3244 0.144 21.6	3519 0.156 23.5	3793 0.169 25.3
650							2733 0.121 18.2	3008 0.134 20.1	3282 0.146 21.9	3556 0.158 23.7	3830 0.170 25.5
700							2771 0.123 18.5	3045 0.135 20.3	3319 0.148 22.1	3594 0.160 24.0	3868 0.172 25.8

条件Condition:
元件温度Element temperature 1500℃
炉子温度Furnace temperature 1300℃
电流Current 150A
表面负荷Surface load 14.5W/cm²

4、 1800等级6/12mm的U型元件 1800 Grade U type 6/12mm elements

热端 Le / 冷端 Lu	150	180	200	250	300	350	400	450	500	550	600
150	686 0.048 5.7	800 0.056 6.7	877 0.061 7.3	1068 0.074 8.9	1260 0.087 10.5	1451 0.101 12.1					
200	711 0.049 5.9	825 0.057 6.9	902 0.063 7.5	1093 0.076 9.1	1285 0.089 10.7	1476 0.103 12.3	1667 0.116 13.9	功率Power W 电阻Resistance Ω 电压Voltage V			
250	736 0.051 6.1	850 0.059 7.1	927 0.064 7.7	1118 0.078 9.3	1310 0.091 10.9	1501 0.104 12.5	1692 0.118 14.1	1884 0.131 15.7			
270	746 0.052 6.2	860 0.060 7.2	937 0.065 7.8	1128 0.078 9.4	1320 0.092 11.0	1511 0.105 12.6	1702 0.118 14.2	1894 0.132 15.8	2085 0.145 17.4		
300	761 0.053 6.3	875 0.061 7.3	952 0.066 7.9	1143 0.079 9.5	1335 0.093 11.1	1526 0.106 12.7	1717 0.119 14.3	1909 0.133 15.9	2100 0.146 17.5	2292 0.159 19.1	2483 0.172 20.7
350	786 0.055 6.5	900 0.063 7.5	977 0.068 8.1	1168 0.081 9.7	1360 0.094 11.3	1551 0.108 12.9	1742 0.121 14.5	1934 0.134 16.1	2125 0.148 17.7	2317 0.161 19.3	2508 0.174 20.9
400	811 0.056 6.8	925 0.064 7.7	1002 0.070 8.3	1193 0.083 9.9	1385 0.096 11.5	1576 0.109 13.1	1767 0.123 14.7	1959 0.136 16.3	2150 0.149 17.9	2342 0.163 19.5	2533 0.176 21.1
450		950 0.066 7.9	1027 0.071 8.6	1218 0.085 10.2	1410 0.098 11.7	1601 0.111 13.3	1792 0.124 14.9	1984 0.138 16.5	2175 0.151 18.1	2367 0.164 19.7	2558 0.178 21.3
500				1243 0.086 10.4	1435 0.100 12.0	1626 0.113 13.6	1817 0.126 15.1	2009 0.140 16.7	2200 0.153 18.3	2392 0.166 19.9	2583 0.179 21.5
550					1460 0.101 12.2	1651 0.115 13.8	1842 0.128 15.4	2034 0.141 16.9	2225 0.155 18.5	2417 0.168 20.1	2608 0.181 21.7
600					1485 0.103 12.4	1676 0.116 14.0	1867 0.130 15.6	2059 0.143 17.2	2250 0.156 18.8	2442 0.170 20.3	2633 0.183 21.9
650							1892 0.131 15.8	2084 0.145 17.4	2275 0.158 19.0	2467 0.171 20.6	2658 0.185 22.1
700							1917 0.133 16.0	2109 0.146 17.6	2300 0.160 19.2	2492 0.173 20.8	2683 0.186 22.4

条件Condition:
元件温度Element temperature 1700℃
炉子温度Furnace temperature 1600℃
电流Current 120A
表面负荷Surface load 10W/cm²

5、1700等级9/18mm的U型元件 1700 Grade U type 9/18mm elements

热端 Le / 冷端 Lu	150	180	200	250	300	350	400	450	500	550	600	650	700	750	800
250	1596 0.021 5.8	1841 0.024 6.7	2005 0.027 7.3	2414 0.032 8.8	2822 0.037 10.3	3231 0.043 11.7	3640 0.048 13.2	4049 0.054 14.7	4458 0.059 16.2	4866 0.064 17.7	5275 0.070 19.2	5684 0.075 20.7	6093 0.081 22.2	6502 0.086 23.6	6910 0.091 25.1
300	1653 0.022 6.0	1899 0.025 6.9	2062 0.027 7.5	2471 0.033 9.0	2880 0.038 10.5	3289 0.043 12.0	3697 0.049 13.4	4106 0.054 14.9	4515 0.060 16.4	4924 0.065 17.9	5333 0.071 19.4	5741 0.076 20.9	6150 0.081 22.4	6559 0.087 23.9	6968 0.092 25.3
350	1711 0.023 6.2	1956 0.026 7.1	2120 0.028 7.7	2529 0.033 9.2	2937 0.039 10.7	3346 0.044 12.2	3755 0.050 13.7	4164 0.055 15.1	4573 0.060 16.6	4981 0.066 18.1	5390 0.071 19.6	5799 0.077 21.1	6208 0.082 22.6	6617 0.087 24.1	7025 0.093 25.5
400	1768 0.023 6.4	2014 0.027 7.3	2177 0.029 7.9	2586 0.034 9.4	2995 0.040 10.9	3404 0.045 12.4	3812 0.050 13.9	4221 0.056 15.3	4630 0.061 16.8	5039 0.067 18.3	5448 0.072 19.8	5856 0.077 21.3	6265 0.083 22.8	6674 0.088 24.3	7083 0.094 25.8
450		2071 0.027 7.5	2235 0.030 8.1	2644 0.035 9.6	3052 0.040 11.1	3461 0.046 12.6	3870 0.051 14.1	4279 0.057 15.6	4688 0.062 17.0	5096 0.067 18.5	5505 0.073 20.0	5914 0.078 21.5	6323 0.084 23.0	6732 0.089 24.5	7140 0.094 26.0
500			2292 0.030 8.3	2701 0.036 9.8	3110 0.041 11.3	3519 0.047 12.8	3927 0.052 14.3	4336 0.057 15.8	4745 0.063 17.3	5154 0.068 18.7	5563 0.074 20.2	5971 0.079 21.7	6380 0.084 23.2	6789 0.090 24.7	7198 0.095 26.2
550				2759 0.036 10.0	3167 0.042 11.5	3576 0.047 13.0	3985 0.053 14.5	4394 0.058 16.0	4803 0.064 17.5	5211 0.069 19.0	5620 0.074 20.4	6029 0.080 21.9	6438 0.085 23.4	6847 0.091 24.9	7255 0.096 26.4
600				2816 0.037 10.2	3225 0.043 11.7	3634 0.048 13.2	4042 0.053 14.7	4451 0.059 16.2	4860 0.064 17.7	5269 0.070 19.2	5678 0.075 20.6	6086 0.080 22.1	6495 0.086 23.6	6904 0.091 25.1	7313 0.097 26.6
650				功率Power W 电阻Resistance Ω 电压Voltage V	3282 0.043 11.9	3691 0.049 13.4	4100 0.054 14.9	4509 0.060 16.4	4918 0.065 17.9	5326 0.070 19.4	5735 0.076 20.9	6144 0.081 22.3	6553 0.087 23.8	6962 0.092 25.3	7370 0.097 26.8
700					3340 0.044 12.1	3749 0.050 13.6	4157 0.055 15.1	4566 0.060 16.6	4975 0.066 18.1	5384 0.071 19.6	5793 0.077 21.1	6201 0.082 22.6	6610 0.087 24.0	7019 0.093 25.5	7428 0.098 27.0
750	条件Condition: 元件温度Element temperature 1500℃ 炉子温度Furnace temperature 1300℃ 电流Current 275A 表面负荷Surface load 14.5W/cm²					3806 0.050 13.8	4215 0.056 15.3	4624 0.061 16.8	5033 0.067 18.3	5441 0.072 19.8	5850 0.077 21.3	6259 0.083 22.8	6668 0.088 24.2	7077 0.094 25.7	7485 0.099 27.2
800						3864 0.051 14.0	4272 0.056 15.5	4681 0.062 17.0	5090 0.067 18.5	5499 0.073 20.0	5908 0.078 21.5	6316 0.084 23.0	6725 0.089 24.5	7134 0.094 25.9	7543 0.100 27.4

6、 1800等级9/18mm的U型元件 1800 Grade U type 9/18mm elements

热端 Le / 冷端 Lu	150	180	200	250	300	350	400	450	500	550	600	650	700	750	800
250	1106 0.023 5.0	1278 0.026 5.8	1393 0.029 6.3	1679 0.035 7.6	1966 0.041 8.9	2253 0.047 10.2	2540 0.052 11.5	2827 0.058 12.8	3114 0.064 14.2	3401 0.070 15.5	3687 0.076 16.8	3974 0.082 18.1	4261 0.088 19.4	4548 0.094 20.7	4835 0.100 22.0
300	1143 0.024 5.2	1315 0.027 6.0	1430 0.030 6.5	1717 0.035 7.8	2004 0.041 9.1	2291 0.047 10.4	2578 0.053 11.7	2864 0.059 13.0	3151 0.065 14.3	3438 0.071 15.6	3725 0.077 16.9	4012 0.083 18.2	4299 0.089 19.5	4586 0.095 20.8	4872 0.101 22.1
350	1181 0.024 5.4	1353 0.028 6.1	1468 0.030 6.7	1754 0.036 8.0	2041 0.042 9.3	2328 0.048 10.6	2615 0.054 11.9	2902 0.060 13.2	3189 0.066 14.5	3476 0.072 15.8	3762 0.078 17.1	4049 0.084 18.4	4336 0.090 19.7	4623 0.096 21.0	4910 0.101 22.3
400	1218 0.025 5.5	1390 0.029 6.3	1505 0.031 6.8	1792 0.037 8.1	2079 0.043 9.4	2366 0.049 10.8	2653 0.055 12.1	2939 0.061 13.4	3226 0.067 14.7	3513 0.073 16.0	3800 0.079 17.3	4087 0.084 18.6	4374 0.090 19.9	4661 0.096 21.2	4947 0.102 22.5
450		1428 0.029 6.5	1543 0.032 7.0	1829 0.038 8.3	2116 0.044 9.6	2403 0.050 10.9	2690 0.056 12.2	2977 0.062 13.5	3264 0.067 14.8	3551 0.073 16.1	3837 0.079 17.4	4124 0.085 18.7	4411 0.091 20.1	4698 0.097 21.4	4985 0.103 22.7
500			1580 0.033 7.2	1867 0.039 8.5	2154 0.044 9.8	2441 0.050 11.1	2728 0.056 12.4	3014 0.062 13.7	3301 0.068 15.0	3588 0.074 16.3	3875 0.080 17.6	4162 0.086 18.9	4449 0.092 20.2	4736 0.098 21.5	5022 0.104 22.8
550				1904 0.039 8.7	2191 0.045 10.0	2478 0.051 11.3	2765 0.057 12.6	3052 0.063 13.9	3339 0.069 15.2	3626 0.075 16.5	3912 0.081 17.8	4199 0.087 19.1	4486 0.093 20.4	4773 0.099 21.7	5060 0.105 23.0
600				1942 0.040 8.8	2229 0.046 10.1	2516 0.052 11.4	2803 0.058 12.7	3089 0.064 14.0	3376 0.070 15.3	3663 0.076 16.7	3950 0.082 18.0	4237 0.088 19.3	4524 0.093 20.6	4811 0.099 21.9	5097 0.105 23.2
650				功率Power W 电阻Resistance Ω 电压Voltage V	2266 0.047 10.3	2553 0.053 11.6	2840 0.059 12.9	3127 0.065 14.2	3414 0.071 15.5	3701 0.076 16.8	3987 0.082 18.1	4274 0.088 19.4	4561 0.094 20.7	4848 0.100 22.0	5135 0.106 23.3
700					2304 0.048 10.5	2591 0.054 11.8	2878 0.059 13.1	3164 0.065 14.4	3451 0.071 15.7	3738 0.077 17.0	4025 0.083 18.3	4312 0.089 19.6	4599 0.095 20.9	4886 0.101 22.2	5172 0.107 23.5
750	条件Condition: 元件温度Element temperature 1700℃ 炉子温度Furnace temperature 1600℃ 电流Current 220A 表面负荷Surface load 10W/cm²					2628 0.054 11.9	2915 0.060 13.3	3202 0.066 14.6	3489 0.072 15.9	3776 0.078 17.2	4062 0.084 18.5	4349 0.090 19.8	4636 0.096 21.1	4923 0.102 22.4	5210 0.108 23.7
800						2666 0.055 12.1	2953 0.061 13.4	3239 0.067 14.7	3526 0.073 16.0	3813 0.079 17.3	4100 0.085 18.6	4387 0.091 19.9	4674 0.097 21.2	4961 0.102 22.5	5247 0.108 23.9

7、1700等级6/12mm的W型元件 1700 Grade W type 6/12mm elements

热端 Le / 冷端 Lu	315	355	410	500	620	730	800	820	1000
470	4053 0.180 27.0	4503 0.200 30.0	5121 0.228 34.1	6133 0.273 40.9	7481 0.333 49.9	8718 0.387 58.1	9505 0.422 63.4	9729 0.432 64.9	11753 0.522 78.4
500	4076 0.181 27.2	4525 0.201 30.2	5144 0.229 34.3	6155 0.274 41.0	7504 0.334 50.0	8740 0.388 58.3	9527 0.423 63.5	9752 0.433 65.0	11775 0.523 78.5
520	4091 0.182 27.3	4540 0.202 30.3	5159 0.229 34.4	6170 0.274 41.1	7519 0.334 50.1	8755 0.389 58.4	9542 0.424 63.6	9767 0.434 65.1	11790 0.524 78.6
560	4121 0.183 27.5	4570 0.203 30.5	5189 0.231 34.6	6200 0.276 41.3	7549 0.336 50.3	8785 0.390 58.6	9572 0.425 63.8	9797 0.435 65.3	11820 0.525 78.8
580	4136 0.184 27.6	4585 0.204 30.6	5204 0.231 34.7	6215 0.276 41.4	7564 0.336 50.4	8800 0.391 58.7	9587 0.426 63.9	9812 0.436 65.4	11835 0.526 78.9
600	4151 0.184 27.7	4600 0.204 30.7	5219 0.232 34.8	6230 0.277 41.5	7579 0.337 50.5	8815 0.392 58.8	9602 0.427 64.0	9827 0.437 65.5	11850 0.527 79.0
630	4173 0.185 27.8	4623 0.205 30.8	5241 0.233 34.9	6253 0.278 41.7	7601 0.338 50.7	8838 0.393 58.9	9625 0.428 64.2	9849 0.438 65.7	11873 0.528 79.2

条件Condition:
元件温度Element temperature 1500℃
炉子温度Furnace temperature 1300℃
电流Current 150A
表面负荷Surface load 14.5W/cm²

功率Power W
电阻Resistance Ω
电压Voltage V

8、1700等级9/18mm的W型元件 1700 Grade W type 9/18mm elements

热端 Le / 冷端 Lu	315	355	410	500	620	730	800	820	1000
470	5904 0.078 21.5	6562 0.087 23.9	7468 0.099 27.2	8949 0.118 32.5	10925 0.144 39.7	12736 0.168 46.3	13889 0.184 50.5	14218 0.188 51.7	17181 0.227 62.5
500	5938 0.079 21.6	6597 0.087 24.0	7502 0.099 27.3	8984 0.119 32.7	10960 0.145 39.9	12771 0.169 46.4	13923 0.184 50.6	14252 0.188 51.8	17216 0.228 62.6
520	5961 0.079 21.7	6620 0.088 24.1	7525 0.100 27.4	9007 0.119 32.8	10983 0.145 39.9	12794 0.169 46.5	13946 0.184 50.7	14275 0.189 51.9	17239 0.228 62.7
560	6007 0.079 21.8	6666 0.088 24.2	7571 0.100 27.5	9053 0.120 32.9	11029 0.146 40.1	12840 0.170 46.7	13992 0.185 50.9	14321 0.189 52.1	17285 0.229 62.9
580	6030 0.080 21.9	6689 0.088 24.3	7594 0.100 27.6	9076 0.120 33.0	11052 0.146 40.2	12863 0.170 46.8	14015 0.185 51.0	14344 0.190 52.2	17308 0.229 62.9
600	6053 0.080 22.0	6712 0.089 24.4	7617 0.101 27.7	9099 0.120 33.1	11075 0.146 40.3	12886 0.170 46.9	14038 0.186 51.0	14367 0.190 52.2	17331 0.229 63.0
630	6088 0.080 22.1	6746 0.089 24.5	7652 0.101 27.8	9133 0.121 33.2	11109 0.147 40.4	12920 0.171 47.0	14073 0.186 51.2	14402 0.190 52.4	17365 0.230 63.1

条件Condition:
元件温度Element temperature 1500℃
炉子温度Furnace temperature 1300℃
电流Current 275A
表面负荷Surface load 14.5W/cm²

功率Power W
电阻Resistance Ω
电压Voltage V

专业·品质·诚信·创新

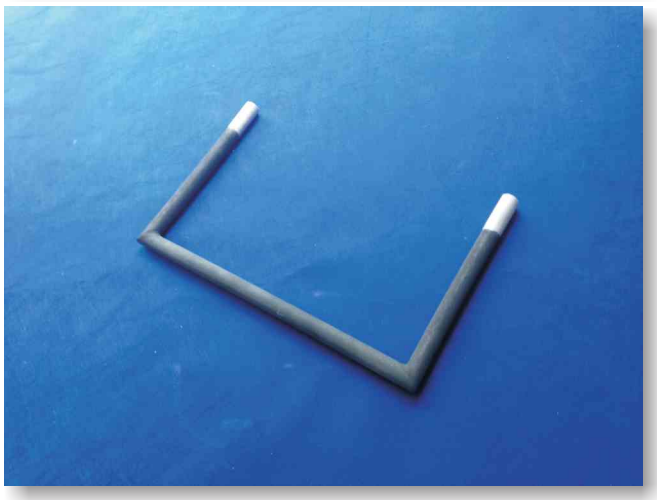

PROFESSIONAL QUALITY SINCERITY INNOVATION

ZHENGZHOU RISESUN MA

Risesun

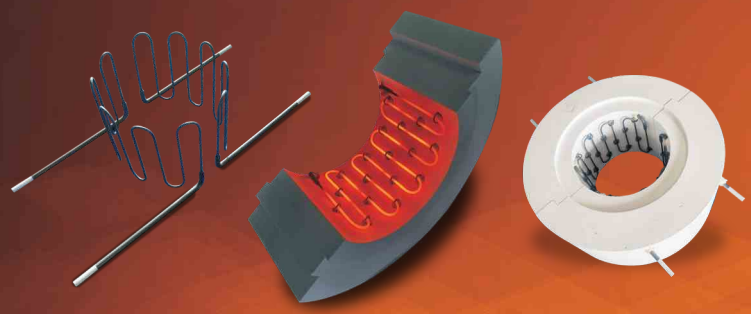

地址：河南省登封市高新技术工业园区建东路
电话：0371-62705066/62705699
传真：0371-62705099/62705199
E-mail:info@risesun.co
http://www.risesun.co

Address: Jiandong Road, High-Tech Industrial Zone,
Dengfeng, Henan 452483, China
Tel：0086-371-62705299
Fax：0086-371-62705199
E-mail:info@risesun.co
http://www.risesun.co

2020年12月印制 第2版 2nd edition, printed in Dec 2020